PURCHASER(S) FINAL APPROVAL FORM

June 10, 2022

Job # **31136** New Home Address: **25 Enns Court ; 75/18/222-2161**

Purchaser(s): **JAMIE TALLMANN & DANNY RUPERT**

Phone: **7802923301** (H) (C) Email: **jmtallmann@gmail.com**

House Model: **COLUMBIA** Specification: **TRAILBLAZER** Subdivision: **SOUTHPOINTE - RSL**

Sales Area Manager: **JUSTIN BATIUK**

To ensure your home meets or exceeds your expectations, review of the plans prior to commencing construction is required. We request that you verify the following details:

1. The drawings are accurate of all requested changes with the exception of any pending electrical changes. (Electrical changes are the only permissible interior change at this stage).

2. The exterior color chart and elevation(s) accurately represent the correct exterior colors, products and applicable changes previously made. Purchaser accepts and acknowledges that all front and/or high visibility side/rear elevations (as applicable), setbacks, and concrete applications, are subject to final architectural approval. Any exterior changes requested moving forward, are also subject to architectural resubmission approval and the purchaser will be responsible for the associated $500.00 resubmission fee.

3. The purchaser has received a full explanation of site conditions including but not limited to lot size, location of the house on the lot, driveway shape/size, right-of-ways, retaining walls, easements, fixtures, street furniture, and neighboring structures. Purchaser is aware that, if required, retaining walls are not included in the purchase price and are the sole responsibility of the purchaser.

4. Trail Appliance and Design Q selections, colors, and finishings have been finalized. Purchaser accepts and acknowledges that no further changes to appliance dimensions will be permitted once client plans are completed.

   In the event the purchaser is providing their own appliances, ensuring the selected appliances fit within the standard openings will be the responsibility of the purchaser(s).

5. The purchaser accepts and acknowledges that any conversation about possession up until the 35 day written notice is provided, is to be considered an estimation only.

6. Purchaser understands that there are two (2) scheduled visits during construction: at completion of rough-ins; and at cabinet installation. Purchaser will be contacted to book these appointments. Please note these will be weekday appointments and Alberta Workplace and Safety rules must be adhered to.

7. The Purchaser accepts and acknowledges that there <u>will be no further changes past the purchaser final plan approval stage.</u>

The Purchaser(s) hereby acknowledge that they have read, understood, and agree to the above terms of the contract.

DocuSigned by: 4/19/2023
0AE8FC093534454...
Jamie Tallmann
signed on

DocuSigned by: 4/20/2023
5C33D060FA2142C...
Authorized Signatory Pacesetter Homes (Edmonton)

DocuSigned by: 4/19/2023
3EAEFFD277BE43A...
DANNY RUPERT
signed on

DS JB

Office Use only:

DS CB DS KY

DS VB

Pacesetter HOMES A QUALICO Company

EXTERIOR COLOR CHART

Job #:	**31136**	**New Home Address:**	**25 Enns Court, Ft. Sask, AB**
Purchaser(s):	**Jamie Tallmann & Danny Rupert**		
Phone:	**780-292-3301**	**Email:**	jmtallmann@gmail.com
House Model:	**Columbia**	**Specification:Trailblazer**	
Area Sales Manager:	**Justin Batiuk**	**Subdivision**	Southpointe

Elevation Selected:

FINISH	MATERIAL	MANUFACTURER	COLOR
Roofing	Asphalt shingles	BP VANGUARD	SHADOW BLACK
Primary Siding	VINYL	ROYAL	PEBBLE CLAY
Secondary Siding			
Siding Profile	TRADITIONAL	TRADITIONAL	TRADITIONAL
Siding Corners	VINYL	ROYAL	Pebble Clay
Board & Batten	VINYL	ROYAL	NATURAL CEDAR
Vertical Siding			
Brick or Stone	STONE	IXL	Stacked /Black River
Soffit & Fascia	ALUMINUM	ROYAL	BLACK
Eavestrough & Downspouts	Aluminum	Royal	Black
Trims & Surrounds	ALUMINUM & SMART BOARD	ROYAL	BLACK
Shadowboards	N/A		
Shakes	N/A		
Crezone Panels	N/A		
Metal Panels	N/A		
Front Door	PAINT	DULUX	** see special comments
Garage Door	PAINT TO MATCH	DULUX	PEBBLE CLAY
Windows	VINYL	ALL WEATHER WINDOWS	White
Window Grills		NA	White/Wide
Louvers	N/A		
Shutters	N/A		

ERRORS AND OMMISIONS

Home plan perusal and confirmation is essential prior to home construction. However, errors and omissions may occur on the plans. Such errors and omissions are overruled by any addendums, specifications and the offer to purchase. The builder will not be responsible for such errors and omissions.

Customer Initial: DS DS

EXTERIOR COLOR CHART

FINISH	MATERIAL	MANUFACTURER	COLOR
Keystones	N/A		
Brackets	N/A		
Dentils	N/A		
Gable Trusses/Battens	N/A		
Post/Column	SEE COMMENTS	Painted to match	
Post/Column Collar	Smart Board	Painted to match	** see special comments
Front Verandah Railing	Aluminum	Home-Rail Ltd.	Black
Front Verandah Skirting	N/A		
Front Verandah Steps (risers and stringers ONLY)	PRECAST CONCRETE		
Special Comments	STONE ON GARAGE FRONT TO GO ALL THE WAY UP TO 8' SMART BOARD BATTEN OVER TOP OF OH DOOR. FROM BOTTOM ON CORNERS OF GARAGE WITH A 2 FOOT WRAP AROUND. FRONT POST PAINTED BLACK TO MATCH TRIM. FRONT STEP RAILING TO BE BLACK. FRONT DOOR 3RD ACCENT COLOR - DULUX - RED GUMBALL DLX1187-7.		

Please note: Additional costs associated with any premium selection or upgrade indicated above are the responsibility of the purchaser.

The Purchaser(s) hereby acknowledge that they have read, understood and agree to the above terms of the contract.

ERRORS AND OMMISIONS

Home plan perusal and confirmation is essential prior to home construction. However, errors and omissions may occur on the plans. Such errors and omissions are overruled by any addendums, specifications and the offer to purchase. The builder will not be responsible for such errors and omissions.

Customer Initial: DS DS

DocuSigned by:
Mike Rudnisky
5C33D060FA2142C...
3/10/2023

Authorized Signatory Pacesetter Homes Ltd.

Signed on

Buyer Signature DocuSigned by: 0AE8FC093534454... 3/9/2023

Buyer Name:

Co-Buyer Signature DocuSigned by: 3EAEFFD277BE43A... 3/9/2023

Co-Buyer Name:

DS CB DS KV DS JB DS VB

DocuSign Envelope ID: DF254F18-B5BA-4FDC-9026-5FA086690C37

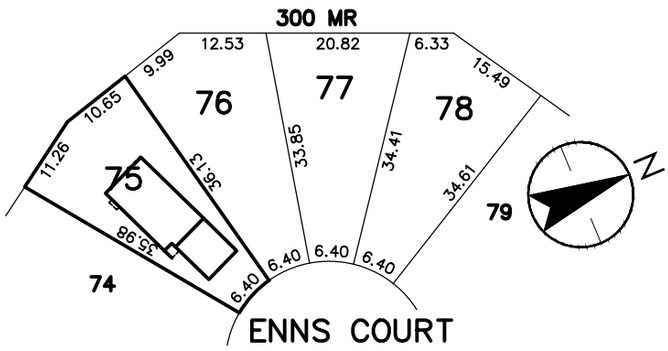

ERRORS AND OMMISIONS

Home plan perusal and confirmation is essential prior to home construction. However, errors and omissions may occur on the plans. Such errors and omissions are overruled by any addendums, specifications and the offer to purchase. The builder will not be responsible for such errors and omissions.

Customer Initial: DS DS

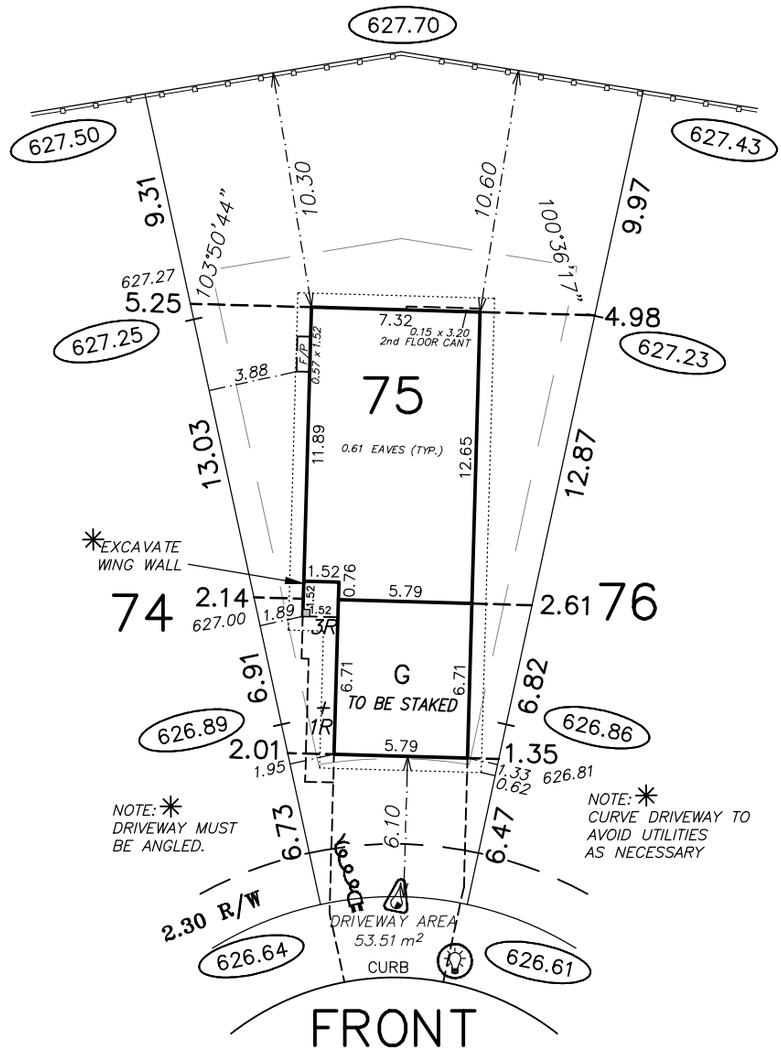

LOT AREA = 510.32 m²
HOUSE AREA = 133.88 m²
SITE COVERAGE = 26.23 %

LOWEST FOOTING ELEVATION
FOR GRAVITY
STORM SERVICE 624.50

DRAINAGE TYPE – REAR TO FRONT
2–3% OVERALL LOT SLOPE

Garage Location –
Hydrant –
C.C. Location –
Power Service –
Street Light –
Service Pedestal –
Transformer –
Critical Swale Grades –
Direction Of Surface Drainage

House Type: 2 STOREY
Finished Floor: 628.12
Bottom Footing: H = 625.16 G = 625.49
Finished Grade Front: 627.41 3 RISE + DOWN 7"
Finished Grade Back: Left = 627.60 Right = 627.55
Bottom Back Door Sill: 628.12
Bottom Bsm't Window: WELLS AS REQ'D
Top Conc. Bsm't Wall: 627.80
Finished Garage Floor: 627.12 1 RISE IN WALK
Sanitary Sewer Invert: 623.82 Storm-624.27

JOIST 0.32 CONC.WALL 2.44 FOOTING 0.20

COLUMBIA (GARAGE ON RIGHT)

SCALE 1 : 300 0 5 10 15

Foundation Wall Height: 8 ' 0 "

Rain Water Leaders: Not Required

REVISION
DH 03/28/23

R1

*It is the responsibility of the builder to contact the soils consultant to determine if there are any special considerations pertaining to house foundation construction.
*The elevation of this house has been designed so that it will be in conformance with the lot grading plan.
*This plan is subject to the approval of the local approving authority and the agent responsible for the architectural control guidelines.
*Stantec Geomatics will accept no responsibility for any costs incurred due to an error or omission on this plan if construction starts prior to the subject approvals.
*All dimensions and services shown must be confirmed by contractor prior to excavation.
*All distances shown are in metres and decimals thereof.
*This Plot Plan is the property of Stantec Geomatics. It is forbidden to use this Plot Plan for survey layout of the building location and/or elevation without prior written consent from Stantec Geomatics.

Stantec Geomatics Ltd.
400 - 10220 103 Avenue NW
Edmonton, Alberta, Canada
T5J 0K4
Tel. 780-917-7000
Fax. 780-917-7289
www.stantec.com

Legal Description
LOT 75 BLOCK 18 PLAN 222-2161
SOUTH POINTE

Municipal Address
25 ENNS COURT
FORT SASKATCHEWAN

Builder
PACESETTER HOMES

Title
Plot Plan
Your File: 31136
DH 03/15/23 PP

V:\1562\active\56245000\Drawing\South Pointe(Fort Sask.)\2222161(Stage9A Marketing#)\Blk18\75\001 Plot Plan\75P.dwg

DocuSign Envelope ID: DF254F18-B5BA-4FDC-9026-5FA086690C37

Pacesetter HOMES
A QUALICO® Company

JOB # 31136

THE RESIDENCE OF TALLMAN & RUPERT

25 ENNS COURT
FORT SASKATCHEWAN
75 / 18 / 222-2161
SOUTHPOINTE

NUMBER	DATE	NAME	PAGES
1	MARCH 13, 2023	N. HUNT-LEE	ALL
2	APRIL 4, 2023	N. HUNT-LEE	ALL
3	APRIL 11, 2023	N. HUNT-LEE	ALL
4	APRIL 12, 2023	N. HUNT-LEE	3, 8, 10, 12

ERRORS AND OMMISIONS

Home plan perusal and confirmation is essential prior to home construction. However, errors and omissions may occur on the plans. Such errors and omissions are overruled by any addendums, specifications and the offer to purchase. The builder will not be responsible for such errors and omissions.

Customer Initial: DS DS

DocuSign Envelope ID: DF254F18-B5BA-4FDC-9026-5FA086690C37

ERRORS AND OMMISIONS

Home plan perusal and confirmation is essential prior to home construction. However, errors and omissions may occur on the plans. Such errors and omissions are overruled by any addendums, specifications and the offer to purchase. The builder will not be responsible for such errors and omissions.

Customer Initial: DS DS

EXTERIOR VIEW FRONT

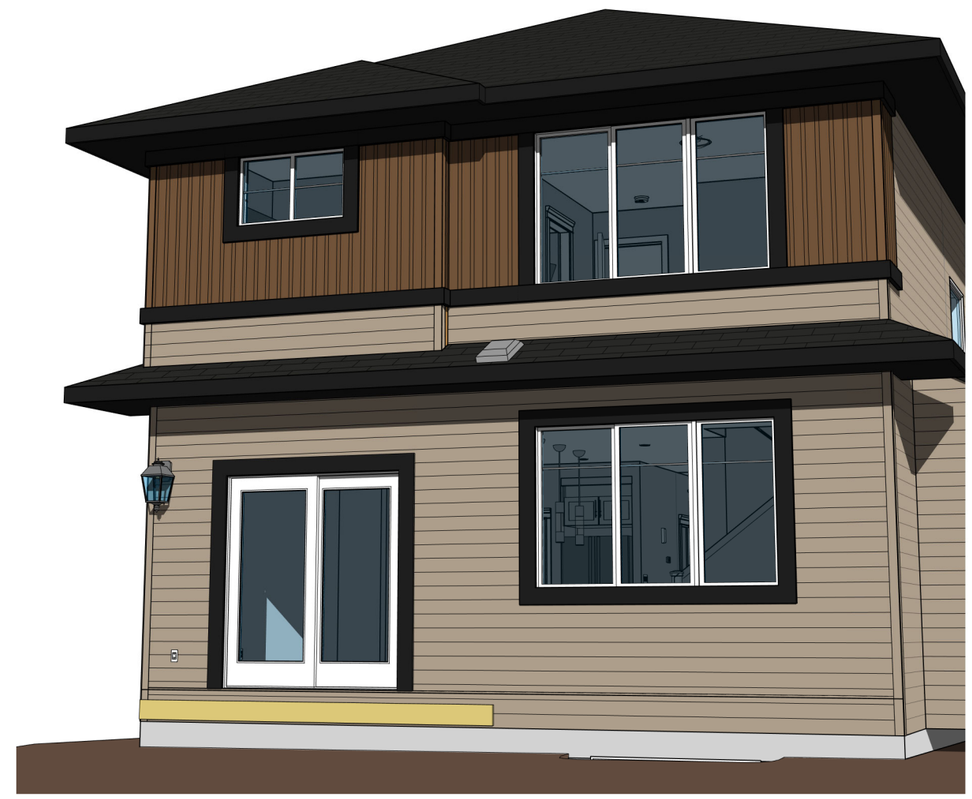

EXTERIOR VIEW REAR

** COLOURS SHOWN ARE FOR ILLUSTRATIVE PURPOSES ONLY. REFER TO MANUFACTURER'S SAMPLES FOR ACCURATE REPRESENTATION **

Customer: TALLMAN & RUPERT

TRAILBLAZER SERIES

Page: 1 / 14

Pacesetter HOMES A QUALICO Company

JOB #: 31136

	Const.	Market.
Main Fl.	922 SF	983 SF
Upper Fl.	1117 SF	1175 SF
Total	2039 SF	2158 SF

Address: 25 ENNS COURT, FORT SASKATCHEWAN, AB
75 / 18 / 222-2161

Model: COLUMBIA (P-K)

Drawn By: N. HUNT-LEE

Scale: 3/16" = 1'-0"

Date: 4/12/2023 3:29:06 PM

These blueprints are the property of Pacesetter Homes Ltd. 3203 - 93 Street, Edmonton, Alberta T6N 0B2. All rights reserved, including the right of reproduction in whole or in part, in any form, without the written permission of Pacesetter Homes Ltd.

Construction Square footage is based on floor area
Marketing Square footage includes stairwells

Bsmnt. Devl:

DocuSign Envelope ID: DF254F18-B5BA-4FDC-9026-5FA086690C37

NOTE!

1. FLASHING IS TO BE INSTALLED AT ALL APPROPRIATE LOCATIONS ON ROOF AND ELEVATIONS. -SEE BUILDERS SPECS
2. WINDOW WELLS MAY BE REQUIRED DEPENDING ON FINAL GRADE
3. ALL STAIRS TO HAVE A MINIMUM 10" RUN + 1" NOSING

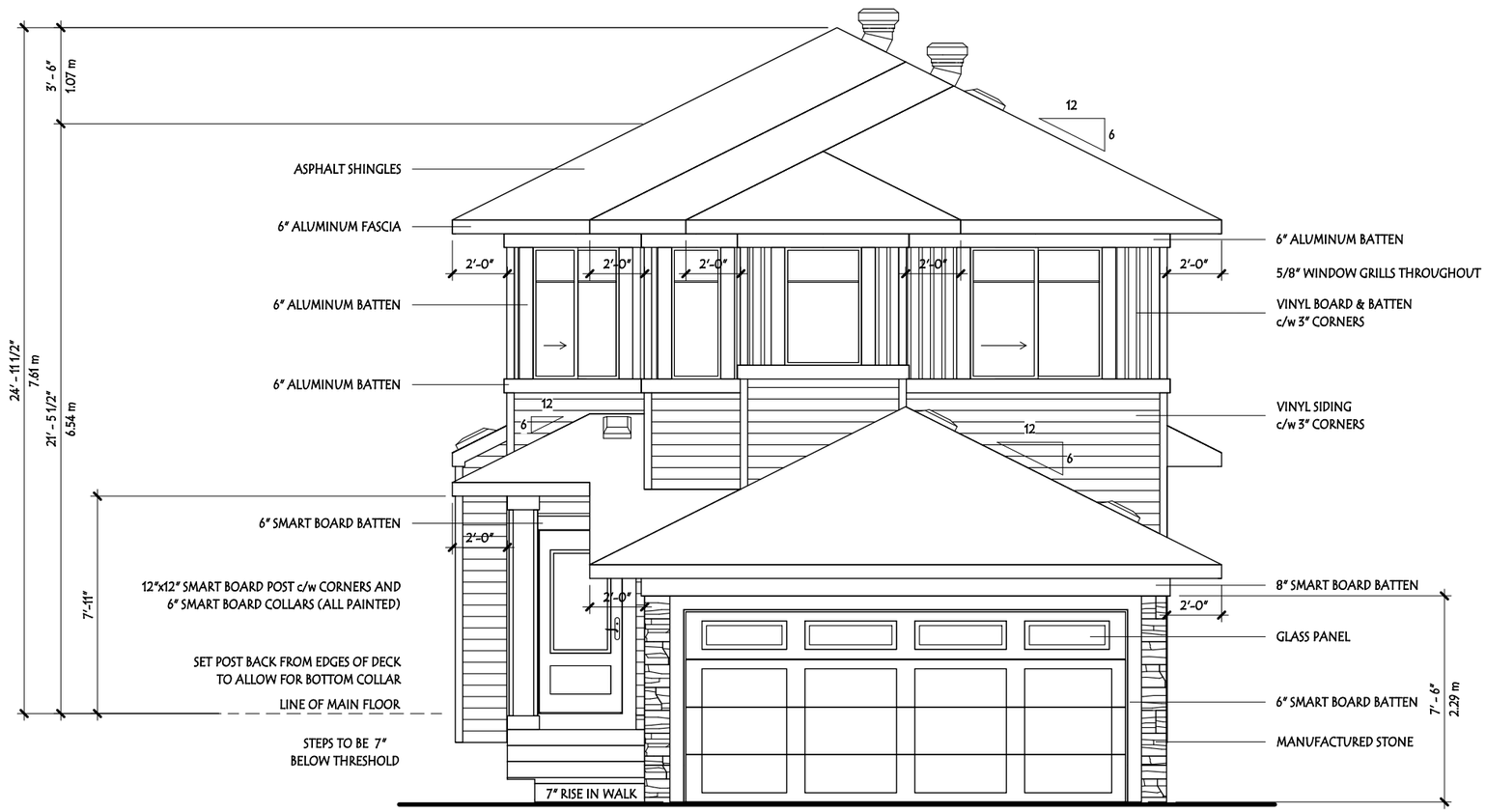

FRONT ELEVATION

ALL WINDOWS TO BE LOW E

TRI-PANE WINDOWS

THROUGHOUT

(UNLESS NOTED OTHERWISE)

ERRORS AND OMMISIONS

Home plan perusal and confirmation is essential prior to home construction. However, errors and omissions may occur on the plans. Such errors and omissions are overruled by any addendums, specifications and the offer to purchase. The builder will not be responsible for such errors and omissions.

Customer Initial: DS DS

Customer: TALLMAN & RUPERT

JOB #: 31136

TRAILBLAZER SERIES

Page: 2 / 14

	Const.	Market.
Main Fl.	922 SF	983 SF
Upper Fl.	1117 SF	1175 SF
Total	2039 SF	2158 SF

Pacesetter HOMES — A QUALICO Company

Address: 25 ENNS COURT, FORT SASKATCHEWAN, AB
75 / 18 / 222-2161

Model: COLUMBIA (P-K)

Drawn By: N. HUNT-LEE

Scale: 3/16" = 1'-0"

Date: 4/12/2023 3:29:07 PM

These blueprints are the property of Pacesetter Homes Ltd. 3203 - 93 Street, Edmonton, Alberta T6N 0B2. All rights reserved, including the right of reproduction in whole or in part, in any form, without the written permission of Pacesetter Homes Ltd.

Construction Square footage is based on floor area
Marketing Square footage includes stairwells

Bsmnt. Devl: 0 SF

DocuSign Envelope ID: DF254F18-B5BA-4FDC-9026-5FA086690C37

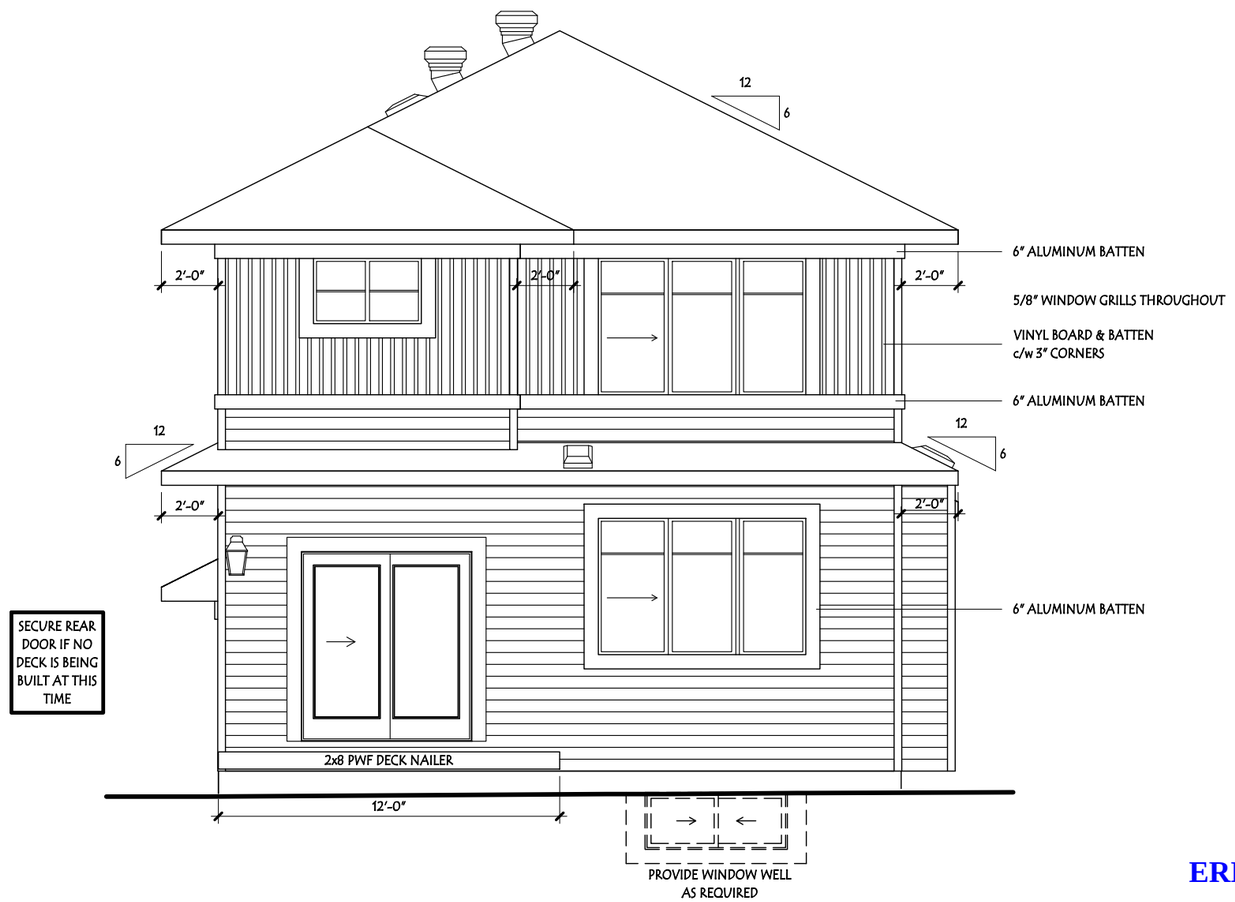

REAR ELEVATION

****ALL WINDOWS TO BE LOW E****

****TRI-PANE WINDOWS****

THROUGHOUT

(UNLESS NOTED OTHERWISE)

ERRORS AND OMMISIONS

Home plan perusal and confirmation is essential prior to home construction. However, errors and omissions may occur on the plans. Such errors and omissions are overruled by any addendums, specifications and the offer to purchase. The builder will not be responsible for such errors and omissions.

DS DS

Customer Initial:_____

Customer: TALLMAN & RUPERT

JOB #: 31136

TRAILBLAZER SERIES

Page: 3 / 14

	Const.	Market.
Main Fl.	922 SF	983 SF
Upper Fl.	1117 SF	1175 SF
Total	2039 SF	2158 SF

Pacesetter HOMES A QUALICO Company

Address: 25 ENNS COURT, FORT SASKATCHEWAN, AB
75 / 18 / 222-2161

Model: COLUMBIA (P-K)

Drawn By: N. HUNT-LEE

Scale: 3/16" = 1'-0"

Date: 4/12/2023 3:29:08 PM

Bsmnt. Devl: 0 SF

These blueprints are the property of Pacesetter Homes Ltd. 3203 - 93 Street, Edmonton, Alberta T6N 0B2. All rights reserved, including the right of reproduction in whole or in part, in any form, without the written permission of Pacesetter Homes Ltd.

Construction Square footage is based on floor area
Marketing Square footage includes stairwells

DocuSign Envelope ID: DF254F18-B5BA-4FDC-9026-5FA086690C37

ERRORS AND OMMISIONS

Home plan perusal and confirmation is essential prior to home construction. However, errors and omissions may occur on the plans. Such errors and omissions are overruled by any addendums, specifications and the offer to purchase. The builder will not be responsible for such errors and omissions.

DS DS

Customer Initial:_____

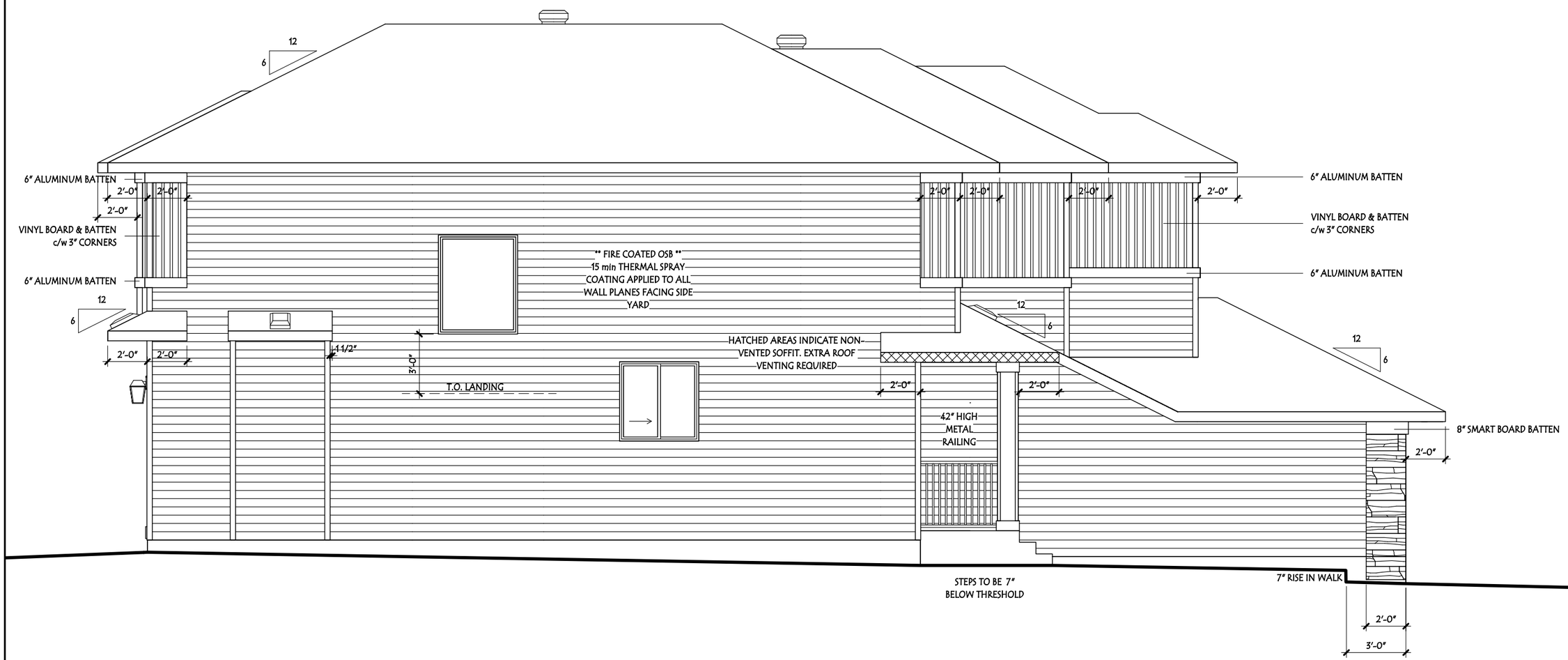

ALL WINDOWS TO BE LOW E
TRI-PANE WINDOWS
THROUGHOUT
(UNLESS NOTED OTHERWISE)

LEFT ELEVATION

Customer: TALLMAN & RUPERT

JOB #: 31136

TRAILBLAZER SERIES

Page: 4 / 14

	Const.	Market.
Main Fl.	922 SF	983 SF
Upper Fl.	1117 SF	1175 SF
Total	2039 SF	2158 SF

Pacesetter HOMES A QUALICO Company

Address: 25 ENNS COURT, FORT SASKATCHEWAN, AB
75 / 18 / 222-2161

Model: COLUMBIA (P-K)

Drawn By: N. HUNT-LEE

Scale: 3/16" = 1'-0"

Date: 4/12/2023 3:29:09 PM

Bsmnt. Devl: 0 SF

These blueprints are the property of Pacesetter Homes Ltd. 3203 - 93 Street, Edmonton, Alberta T6N 0B2. All rights reserved, including the right of reproduction in whole or in part, in any form, without the written permission of Pacesetter Homes Ltd.

Construction Square footage is based on floor area
Marketing Square footage includes stairwells

DocuSign Envelope ID: DF254F18-B5BA-4FDC-9026-5FA086690C37

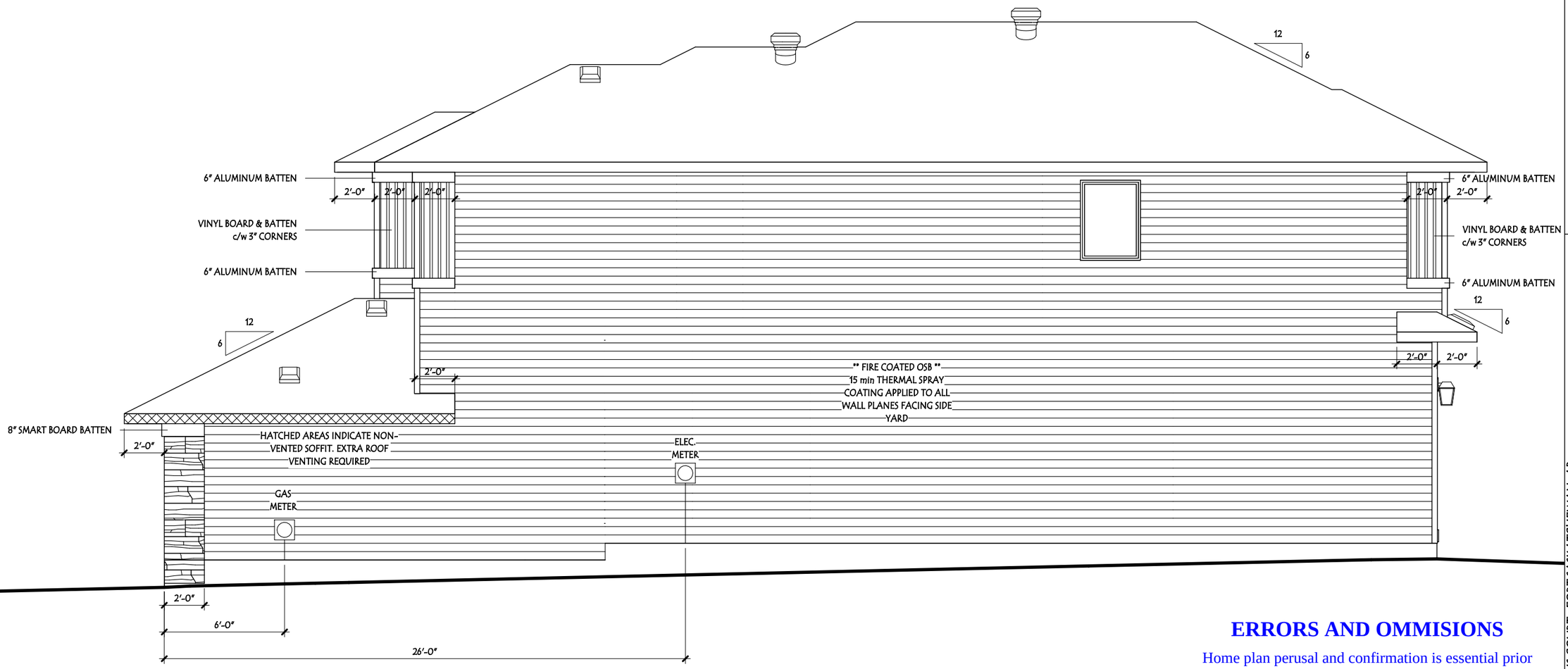

RIGHT ELEVATION

ALL WINDOWS TO BE LOW E
TRI-PANE WINDOWS
THROUGHOUT
(UNLESS NOTED OTHERWISE)

ERRORS AND OMMISIONS

Home plan perusal and confirmation is essential prior to home construction. However, errors and omissions may occur on the plans. Such errors and omissions are overruled by any addendums, specifications and the offer to purchase. The builder will not be responsible for such errors and omissions.

Customer Initial: DS DS

Customer: TALLMAN & RUPERT

JOB #: 31136

	Const.	Market.
Main Fl.	922 SF	983 SF
Upper Fl.	1117 SF	1175 SF
Total	2039 SF	2158 SF

TRAILBLAZER SERIES

Page: 5 / 14

Pacesetter HOMES A QUALICO Company

Address: 25 ENNS COURT, FORT SASKATCHEWAN, AB
75 / 18 / 222-2161

Model: COLUMBIA (P-K)

Scale: 3/16" = 1'-0"

Date: 4/12/2023 3:29:09 PM

Bsmnt. Devl: 0 SF

Drawn By: N. HUNT-LEE

These blueprints are the property of Pacesetter Homes Ltd. 3203 - 93 Street, Edmonton, Alberta T6N 0B2. All rights reserved, including the right of reproduction in whole or in part, in any form, without the written permission of Pacesetter Homes Ltd.

Construction Square footage is based on floor area
Marketing Square footage includes stairwells

DocuSign Envelope ID: DF254F18-B5BA-4FDC-9026-5FA086690C37

ERRORS AND OMMISIONS

Home plan perusal and confirmation is essential prior to home construction. However, errors and omissions may occur on the plans. Such errors and omissions are overruled by any addendums, specifications and the offer to purchase. The builder will not be responsible for such errors and omissions.

Customer Initial:_____

Addendum #15, Line #1

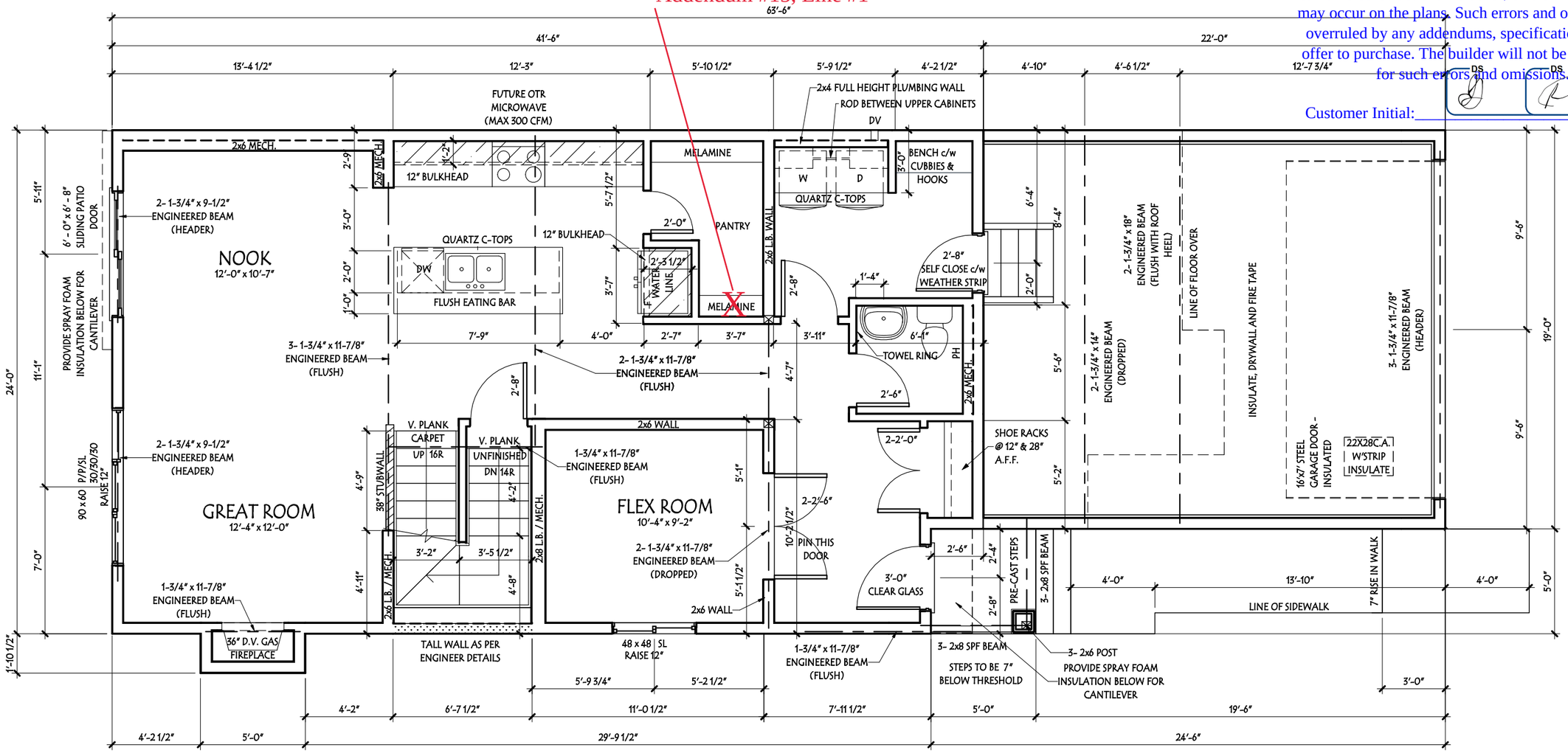

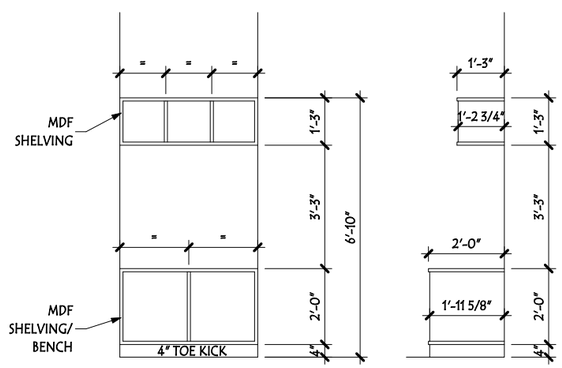

CUBBIE DETAIL

1/4" = 1'-0" MUDROOM

MAIN FLOOR PLAN

9'-0" CEILINGS

NOTE!

1. DIMENSIONS SHOWN ARE TO FACE OF MEMBER OR EXTERIOR WALL FACE UNLESS SHOWN OTHERWISE
2. ALL BEAMS AND LINTELS ARE TO BE 2-2X10 SPRUCE UNLESS NOTED OTHERWISE.

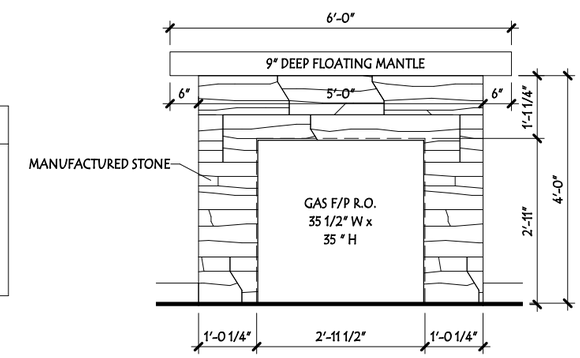

FIREPLACE DETAIL

3/8" = 1'-0"

Customer: TALLMAN & RUPERT

JOB #: 31136

Address: 25 ENNS COURT, FORT SASKATCHEWAN, AB
75 / 18 / 222-2161

Drawn By: N. HUNT-LEE

Model: COLUMBIA (P-K)

Scale: 3/16" = 1'-0"

Date: 4/12/2023 3:29:11 PM

Bsmnt. Devl: 0 SF

	Const.	Market.
Main Fl.	922 SF	983 SF
Upper Fl.	1117 SF	1175 SF
Total	2039 SF	2158 SF

TRAILBLAZER SERIES

Page: 6 / 14

Pacesetter HOMES A QUALICO Company

These blueprints are the property of Pacesetter Homes Ltd. 3203 - 93 Street, Edmonton, Alberta T6N 0B2. All rights reserved, including the right of reproduction in whole or in part, in any form, without the written permission of Pacesetter Homes Ltd.

Construction Square footage is based on floor area
Marketing Square footage includes stairwells

DocuSign Envelope ID: DF254F18-B5BA-4FDC-9026-5FA086690C37

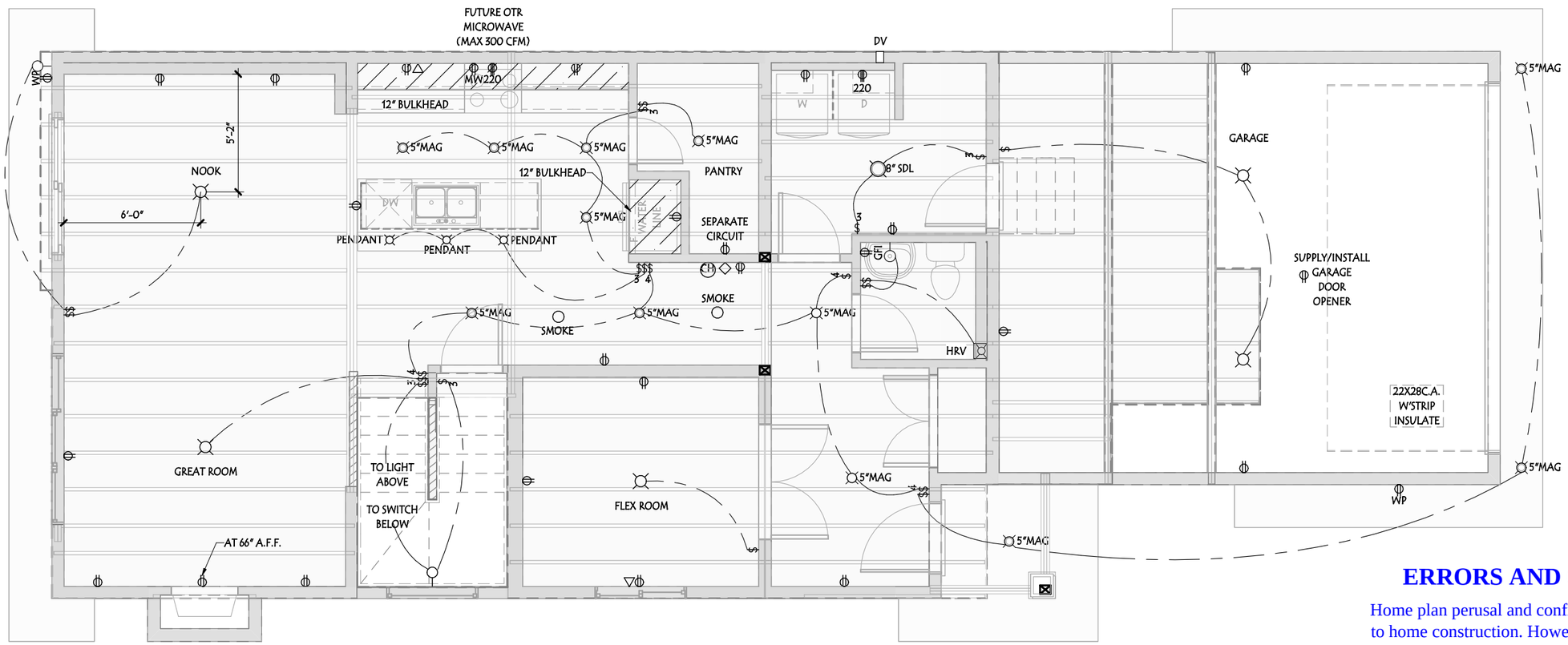

MAIN FLOOR ELEC. / MECH. LAYOUT

ERRORS AND OMMISIONS

Home plan perusal and confirmation is essential prior to home construction. However, errors and omissions may occur on the plans. Such errors and omissions are overruled by any addendums, specifications and the offer to purchase. The builder will not be responsible for such errors and omissions.

Customer Initial: DS DS

ELECTRICAL LEGEND

CEILING LIGHT	WALL LIGHT
ELEC. PLUG	FLUE
220 PLUG	SMOKE DETECTOR
USB PAIRED PLUG	SD/CO DETECTOR
TELEPHONE	VAC. ROUGH IN
TV/CAT5E	CHIME
THERMOSTAT	SINGLE SWITCH
3 WAY SWITCH	ELEC. WIRING
WEEPING TILE TEE	SPEAKER
GAS METER	

ELECTRICAL LOCATIONS SUBJECT TO CHANGE AS REQUIRED BY CODE

Customer: TALLMAN & RUPERT

JOB #: 31136

	Const.	Market.
Main Fl.	922 SF	983 SF
Upper Fl.	1117 SF	1175 SF
Total	2039 SF	2158 SF

TRAILBLAZER SERIES

Page: 7 / 14

Pacesetter HOMES A QUALICO Company

Address: 25 ENNS COURT, FORT SASKATCHEWAN, AB
75 / 18 / 222-2161

Model: COLUMBIA (P-K)

Drawn By: N. HUNT-LEE

Scale: 3/16" = 1'-0"

Date: 4/12/2023 3:29:12 PM

Bsmnt. Devl: 0 SF

These blueprints are the property of Pacesetter Homes Ltd. 3203 - 93 Street, Edmonton, Alberta T6N 0B2. All rights reserved, including the right of reproduction in whole or in part, in any form, without the written permission of Pacesetter Homes Ltd.

Construction Square footage is based on floor area
Marketing Square footage includes stairwells

DocuSign Envelope ID: DF254F18-B5BA-4FDC-9026-5FA086690C37

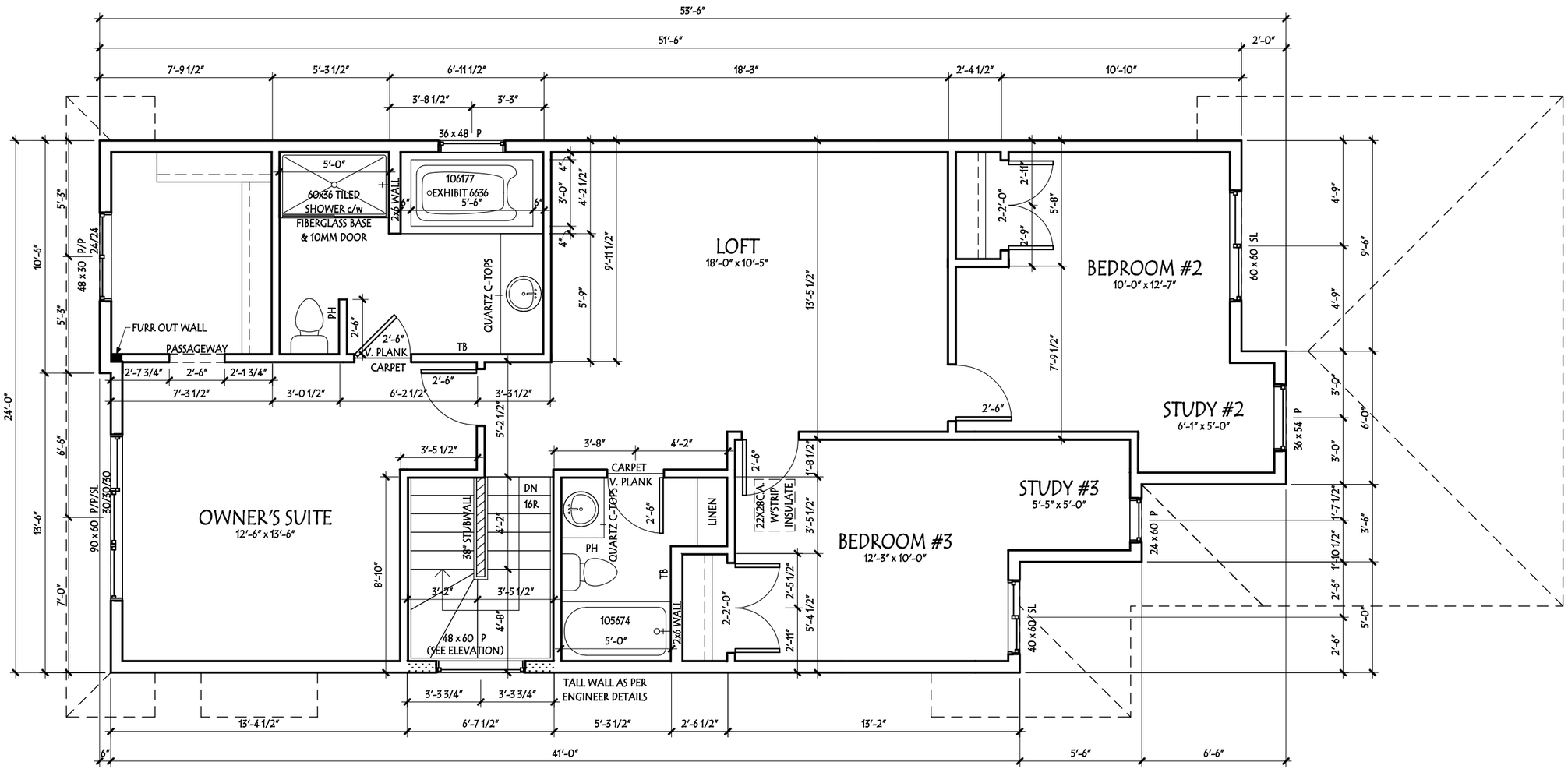

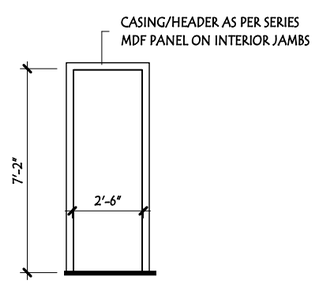

PASSAGEWAY DETAIL

3/16" = 1'-0" BOTH SIDES

UPPER FLOOR PLAN

ERRORS AND OMMISIONS

Home plan perusal and confirmation is essential prior to home construction. However, errors and omissions may occur on the plans. Such errors and omissions are overruled by any addendums, specifications and the offer to purchase. The builder will not be responsible for such errors and omissions.

Customer Initial: DS DS

Customer: TALLMAN & RUPERT

JOB #: 31136

TRAILBLAZER SERIES

Page: 8 / 14

	Const.	Market.
Main Fl.	922 SF	983 SF
Upper Fl.	1117 SF	1175 SF
Total	2039 SF	2158 SF

Pacesetter HOMES A QUALICO Company

Address: 25 ENNS COURT, FORT SASKATCHEWAN, AB 75 / 18 / 222-2161

Model: COLUMBIA (P-K)

Drawn By: N. HUNT-LEE

Scale: 3/16" = 1'-0"

Date: 4/12/2023 3:29:14 PM

Bsmnt. Devl: 0 SF

These blueprints are the property of Pacesetter Homes Ltd. 3203 - 93 Street, Edmonton, Alberta T6N 0B2. All rights reserved, including the right of reproduction in whole or in part, in any form, without the written permission of Pacesetter Homes Ltd.

Construction Square footage is based on floor area
Marketing Square footage includes stairwells

DocuSign Envelope ID: DF254F18-B5BA-4FDC-9026-5FA086690C37

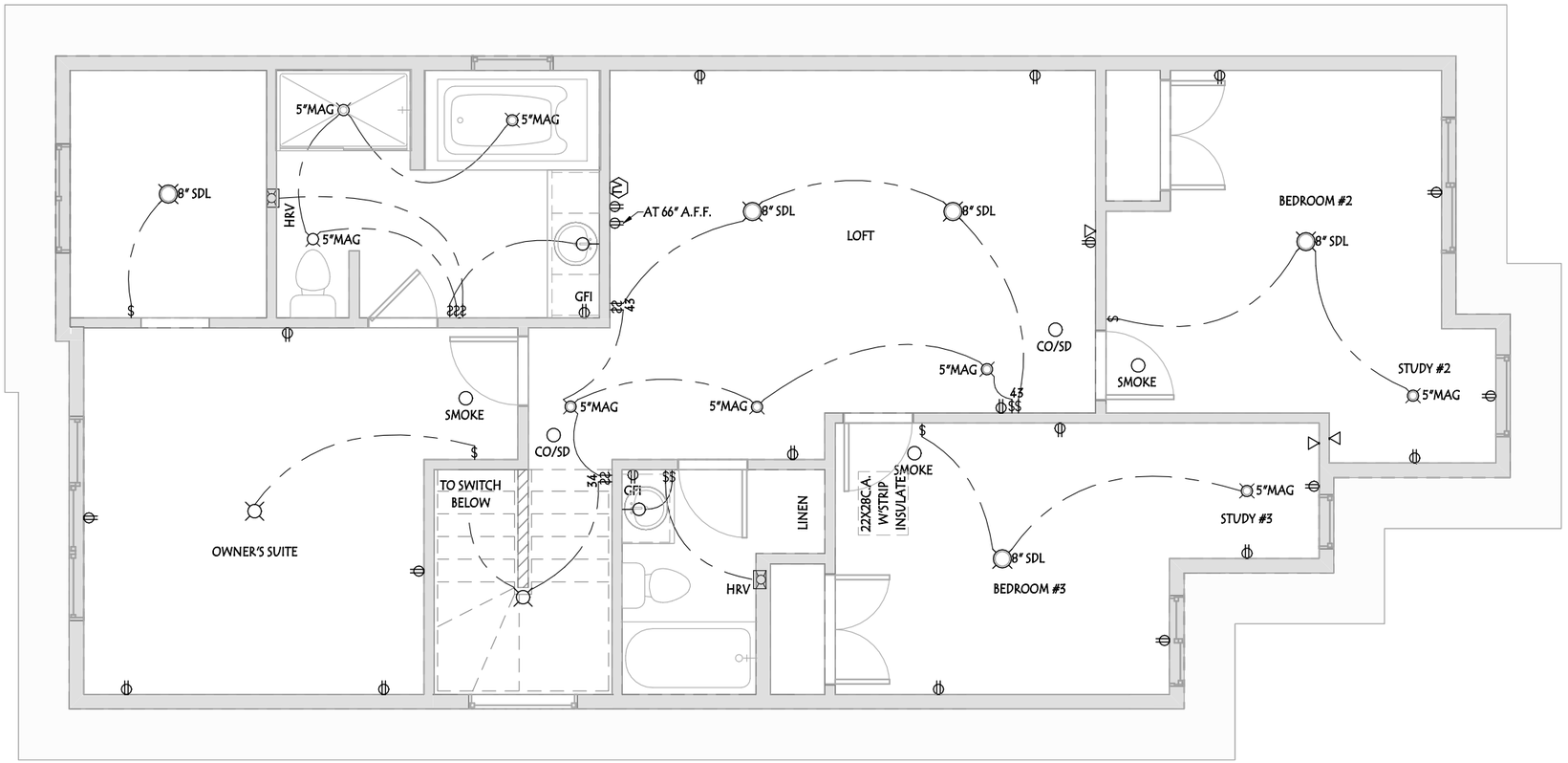

UPPER FLOOR ELEC. LAYOUT

ERRORS AND OMMISIONS

Home plan perusal and confirmation is essential prior to home construction. However, errors and omissions may occur on the plans. Such errors and omissions are overruled by any addendums, specifications and the offer to purchase. The builder will not be responsible for such errors and omissions.

DS DS

Customer Initial:_____

ELECTRICAL LEGEND

CEILING LIGHT	WALL LIGHT
ELEC. PLUG	FLUE
220 PLUG	SMOKE DETECTOR
USB PAIRED PLUG	SD/CO DETECTOR
TELEPHONE	VAC. ROUGH IN
TV/CAT5E	CHIME
THERMOSTAT	SINGLE SWITCH
3 WAY SWITCH	ELEC. WIRING
WEEPING TILE TEE	SPEAKER
GAS METER	

ELECTRICAL LOCATIONS SUBJECT TO CHANGE AS REQUIRED BY CODE

Customer: TALLMAN & RUPERT

JOB #: 31136

TRAILBLAZER SERIES

Page: 9 / 14

	Const.	Market.
Main Fl.	922 SF	983 SF
Upper Fl.	1117 SF	1175 SF
Total	2039 SF	2158 SF

Address: 25 ENNS COURT, FORT SASKATCHEWAN, AB
75 / 18 / 222-2161

Model: COLUMBIA (P-K)

Scale: 3/16" = 1'-0"

Date: 4/12/2023 3:29:15 PM

0 SF

Drawn By: N. HUNT-LEE

Bsmnt. Devl:

These blueprints are the property of Pacesetter Homes Ltd. 3203 - 93 Street, Edmonton, Alberta T6N 0B2. All rights reserved, including the right of reproduction in whole or in part, in any form, without the written permission of Pacesetter Homes Ltd.

Construction Square footage is based on floor area
Marketing Square footage includes stairwells

Pacesetter HOMES
A QUALICO Company

DocuSign Envelope ID: DF254F18-B5BA-4FDC-9026-5FA086690C37

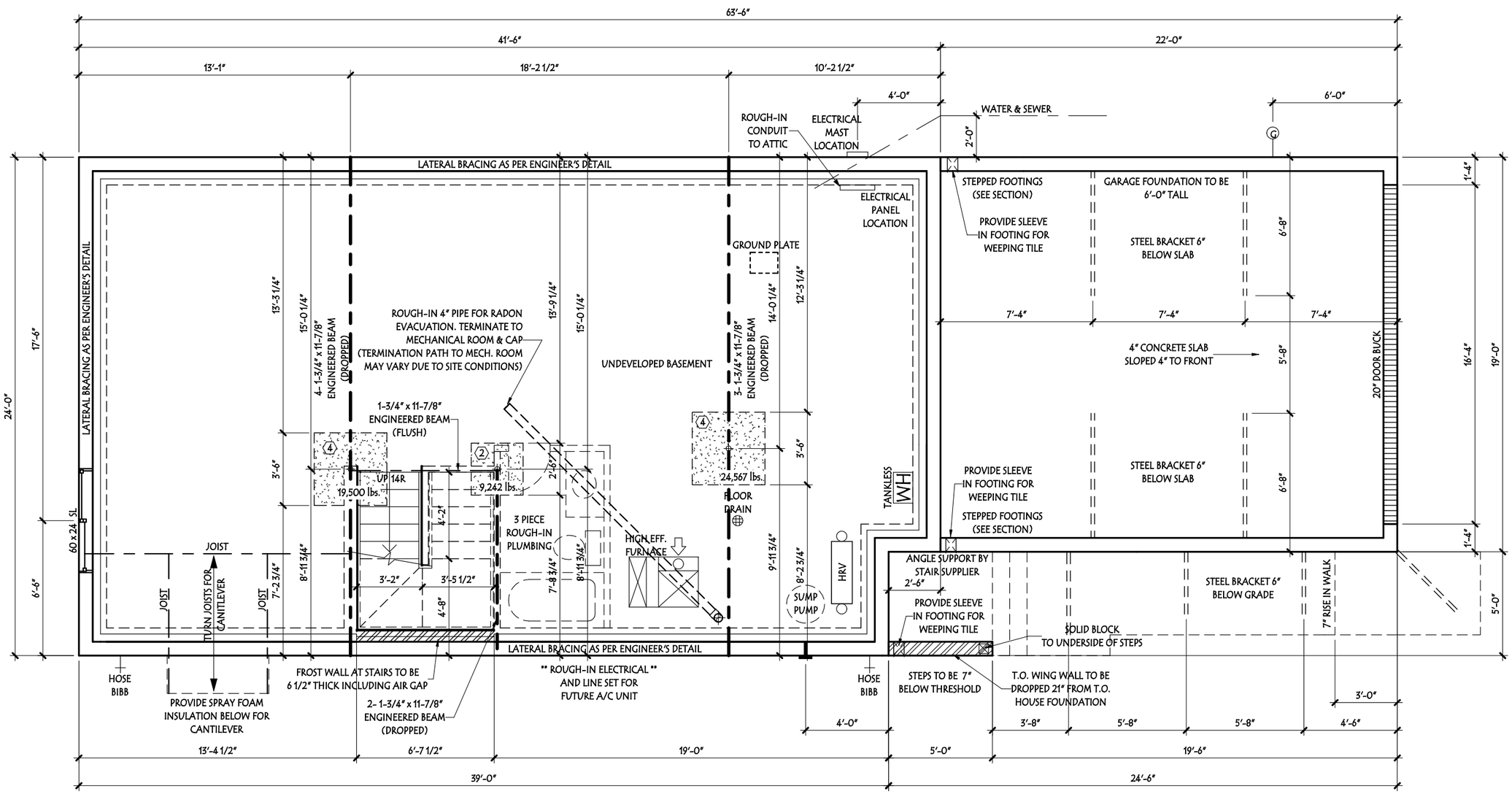

	MAXIMUM CAPACITY (20MPa Conc.)	CONC. PAD DIMENSIONS (l x w x d)	AMOUNT & SIZE OF REBAR
1	8,350 LBS	24"x24"x9"	2-10 M
2	13,050 LBS	30"x30"x9"	3-10 M
3	18,800 LBS	36"x36"x9"	4-10 M
4	25,580 LBS	42"x42"x9"	5-10 M
5	33,420 LBS	48"x48"x10"	7-10 M

REBAR SPACING AS PER MITEK'S DETAIL

PAD LEGEND
(BASED ON MITEK COLUMNS)

FOUNDATION PLAN

ALL FROST WALLS TO BE
8" THICK INCLUDING AIR GAP
(UNLESS NOTED OTHERWISE)

ERRORS AND OMMISIONS

Home plan perusal and confirmation is essential prior to home construction. However, errors and omissions may occur on the plans. Such errors and omissions are overruled by any addendums, specifications and the offer to purchase. The builder will not be responsible for such errors and omissions.

Customer Initial: DS DS

Customer: TALLMAN & RUPERT
JOB #: 31136
Address: 25 ENNS COURT, FORT SASKATCHEWAN, AB
75 / 18 / 222-2161
Drawn By: N. HUNT-LEE

TRAILBLAZER SERIES
Page: 10 / 14

	Const.	Market.
Main Fl.	922 SF	983 SF
Upper Fl.	1117 SF	1175 SF
Total	2039 SF	2158 SF

Model: COLUMBIA (P-K)
Scale: 3/16" = 1'-0"
Date: 4/12/2023 3:29:16 PM
Bsmnt. Devl: 0 SF

Pacesetter HOMES
A QUALICO Company

These blueprints are the property of Pacesetter Homes Ltd. 3203 - 93 Street, Edmonton, Alberta T6N 0B2. All rights reserved, including the right of reproduction in whole or in part, in any form, without the written permission of Pacesetter Homes Ltd.

Construction Square footage is based on floor area
Marketing Square footage includes stairwells

DocuSign Envelope ID: DF254F18-B5BA-4FDC-9026-5FA086690C37

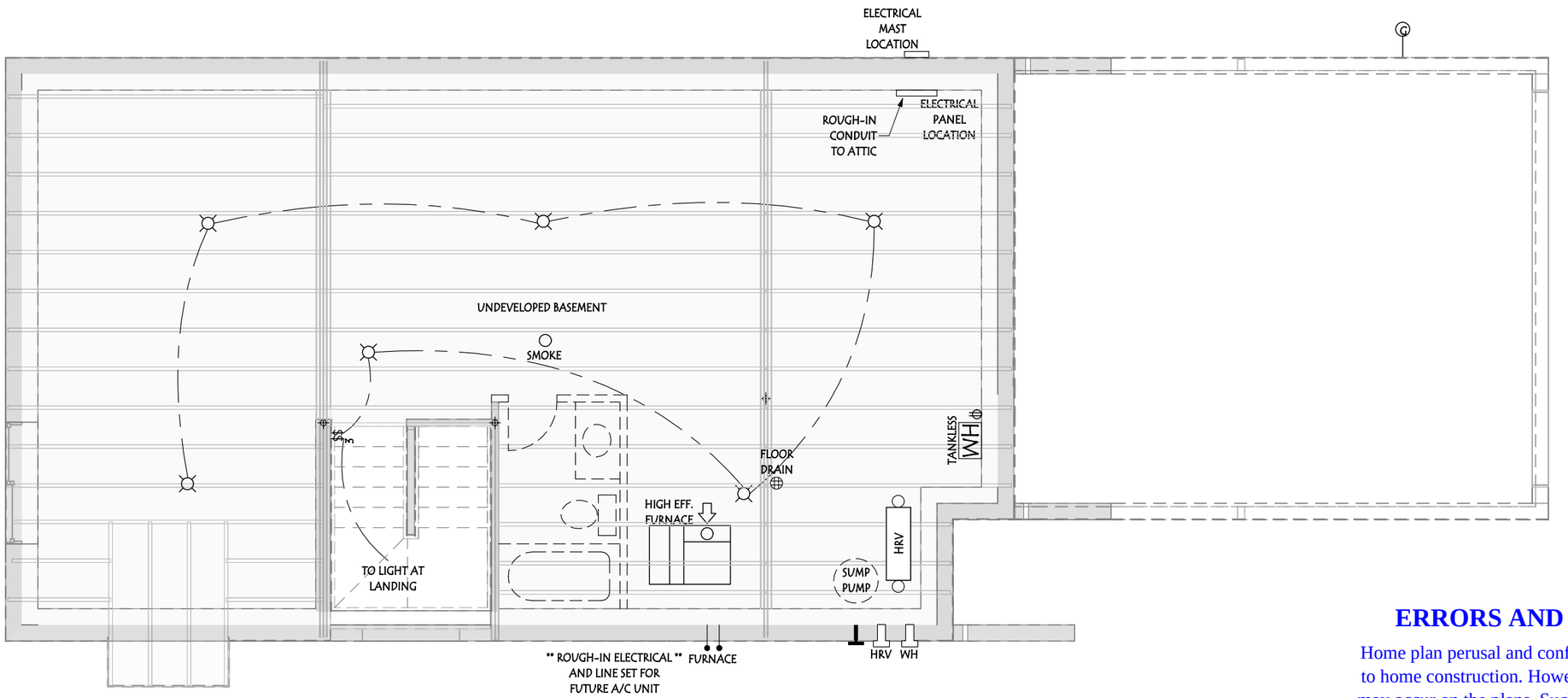

FOUNDATION ELEC. / MECH. LAYOUT

ERRORS AND OMMISIONS

Home plan perusal and confirmation is essential prior to home construction. However, errors and omissions may occur on the plans. Such errors and omissions are overruled by any addendums, specifications and the offer to purchase. The builder will not be responsible for such errors and omissions.

DS DS

Customer Initial:_____

ELECTRICAL LEGEND

CEILING LIGHT	WALL LIGHT
ELEC. PLUG	FLUE
220 PLUG	SMOKE DETECTOR
USB PAIRED PLUG	SD/CO DETECTOR
TELEPHONE	VAC. ROUGH IN
TV/CAT5E	CHIME
THERMOSTAT	SINGLE SWITCH
3 WAY SWITCH	ELEC. WIRING
WEEPING TILE TEE	SPEAKER
GAS METER	

ELECTRICAL LOCATIONS SUBJECT TO CHANGE AS REQUIRED BY CODE

Customer: TALLMAN & RUPERT

JOB #: 31136

TRAILBLAZER SERIES

Page: 11 / 14

	Const.	Market.
Main Fl.	922 SF	983 SF
Upper Fl.	1117 SF	1175 SF
Total	2039 SF	2158 SF

Pacesetter HOMES A QUALICO Company

Address: 25 ENNS COURT, FORT SASKATCHEWAN, AB 75 / 18 / 222-2161

Model: COLUMBIA (P-K)

Scale: 3/16" = 1'-0"

Date: 4/12/2023 3:29:17 PM

Bsmnt. Devl: 0 SF

Drawn By: N. HUNT-LEE

These blueprints are the property of Pacesetter Homes Ltd. 3203 - 93 Street, Edmonton, Alberta T6N 0B2. All rights reserved, including the right of reproduction in whole or in part, in any form, without the written permission of Pacesetter Homes Ltd.

Construction Square footage is based on floor area
Marketing Square footage includes stairwells

DocuSign Envelope ID: DF254F18-B5BA-4FDC-9026-5FA086690C37

NOTES
TRADES ARE RESPONSIBLE FOR CHECKING ALL DIMENSIONS & NOTES AND REPORTING ANY DISCREPANCIES TO THE DESIGNER PRIOR TO CONSTRUCTION.
- ALL LOAD BEARING LINTELS TO BE 2-2x10 #2 SPRUCE UNLESS NOTED OTHERWISE
- FINAL EXTERIOR GRADES MAY VARY
- WINDOW AND DOOR SIZES SHOWN ARE APPROXIMATE ONLY. EXACT ROUGH OPENINGS TO BE SUPPLIED BY MANUFACTURER PRIOR TO CONSTRUCTION.
- MECHANICAL LAYOUT AND SPECS. SUPPLIED BY OTHERS.
- ROOF SHALL BE VENTED WITH AN UNOBSTRUCTED VENT AREA OF NOT LESS THAN 1/300 OF THE CEILING AREA.
- ALL EXTERIOR WALLS WHERE MONO TRUSSES ARE ATTACHED SHALL BE SEALED & PAPERED BEFORE INSTALLING TRUSSES
- THE AREAS REQUIRING VENTILATION WITHIN THE ROOF SPACE OR ATTIC SHALL CONFORM TO NBC - 2019 ALBERTA EDITION 9.19.1.
- ATTIC ACCESS TO BE WEATHERSTRIPPED & INSULATED AS PER NBC - 2019 ALBERTA EDITION 9.19.2.1.
- STEP FOOTING FOR WALKOUTS SHALL BE MAX. RISE 24" & MINIMUM HORIZONTAL DISTANCE OF 24" AS PER NBC - 2019 ALBERTA EDITION 9.15.8.9.
- COMBUSTION AIR SHALL BE PROVIDED FOR FIREPLACE AS PER NBC - 2019 ALBERTA EDITION 9.22.1.4.
- SMOKE ALARMS TO CONFORM TO NBC - 2019 ALBERTA EDITION 9.10.19.
- IF WEEPING TILE IS REQUIRED SLAB ON GROUND SHALL BE DAMPROOFED AS PER NBC - 2019 ALBERTA EDITION 9.13.4.
- EXACT LOCATION OF MECHANICAL, ELECTRICAL, AND PLUMBING EQUIPMENT SUBJECT TO CHANGE DUE TO SITE CONDITIONS.
- GARAGE ENTRY STAIRS MAY VARY IN NUMBER OF RISERS AND LOCATION DUE TO SITE CONDITIONS
- ELEVATIONS, FLOOR LAYOUT AND ROOM DIMENSIONS ARE SUBJECT TO CHANGE DUE TO SITE CONDITIONS
- DRIVEWAYS, SIDEWALKS, AND PARKING PADS SUBJECT TO CHANGE DUE TO SITE CONDITIONS

REFER TO PAGE 13 FOR KEYNOTES

ERRORS AND OMMISIONS

Home plan perusal and confirmation is essential prior to home construction. However, errors and omissions may occur on the plans. Such errors and omissions are overruled by any addendums, specifications and the offer to purchase. The builder will not be responsible for such errors and omissions.

Customer Initial: DS DS

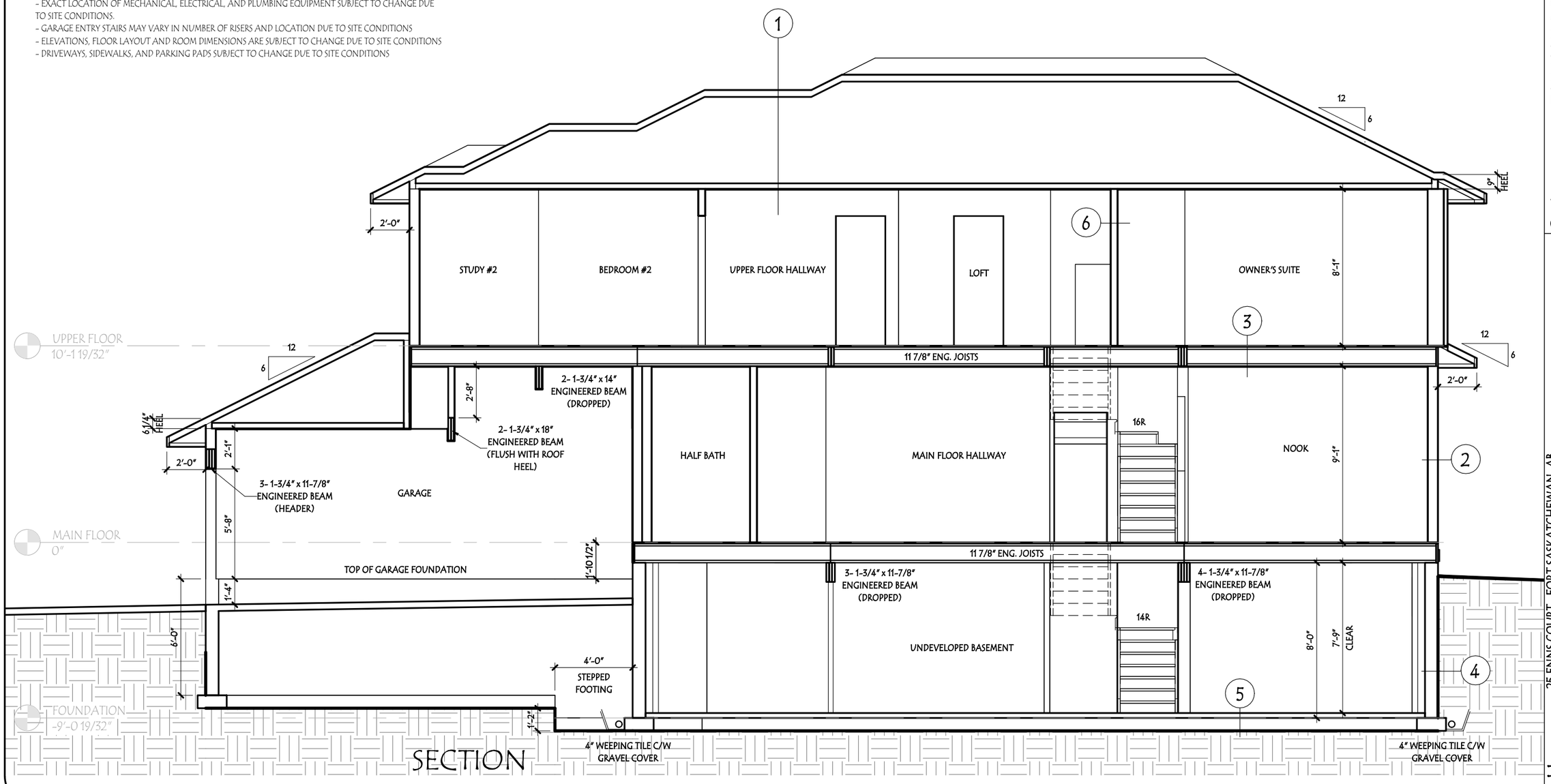

Customer: TALLMAN & RUPERT
JOB #: 31136
Address: 25 ENNS COURT, FORT SASKATCHEWAN, AB
75 / 18 / 222-2161
Drawn By: N. HUNT-LEE

TRAILBLAZER SERIES
Page: 12 / 14

	Const.	Market.
Main Fl.	922 SF	983 SF
Upper Fl.	1117 SF	1175 SF
Total	2039 SF	2158 SF

Model: COLUMBIA (P-K)
Scale: 3/16" = 1'-0"
Date: 4/12/2023 3:29:18 PM
Bsmnt. Devl: 0 SF

These blueprints are the property of Pacesetter Homes Ltd. 3203 - 93 Street, Edmonton, Alberta T6N 0B2. All rights reserved, including the right of reproduction in whole or in part, in any form, without the written permission of Pacesetter Homes Ltd.

Construction Square footage is based on floor area
Marketing Square footage includes stairwells

Pacesetter HOMES
A QUALICO Company

DocuSign Envelope ID: DF254F18-B5BA-4FDC-9026-5FA086690C37

CONSTRUCTION ASSEMBLIES (EFFECTIVE THERMAL RESISTANCE OF ASSEMBLIES)

1 ROOF ASSEMBLIES

UPPER FLOOR ROOF (6.90 RSI)
ASPHALT SHINGLES
3/8" O.S.B. SHEATHING c/w 'H'CLIPS
ENGINEERED WOOD TRUSSES @24" o/c
R-40 LOOSE FILL INSULATION
6 mil CGSB POLY VAPOR BARRIER
1/2" C.D. DRYWALL

UPPER FLOOR VAULTED CEILING (4.06 RSI)
IF REQUIRED AS PER PLANS
ASPHALT SHINGLES
3/8" O.S.B. SHEATHING c/w 'H'CLIPS
ENGINEERED WOOD TRUSSES @24" o/c
R-40 BATT INSULATION
6 mil CGSB POLY VAPOR BARRIER
1/2" C.D. DRYWALL

2 EXTERIOR WALL ASSEMBLIES

STANDARD EXTERIOR WALL (2.77 RSI[1])
INCLUDES EXTERIOR WALLS OF ATTACHED GARAGE, IF APPLICABLE
EXTERIOR CLADDING AS PER PLAN
BUILDING PAPER (AS REQ'D)
3/8" O.S.B. SHEATHING
2X6 STUDS @ 24" o/c (2X6 STUDS @ 16" o/c ON AREAS WHERE MANUFACTURED STONE OR BRICK IS APPLIED)
R-20 BATT INSULATION
6 mil. CGSB POLY VAPOR BARRIER
1/2" DRYWALL

EXTERIOR TALL WALL (2.63 RSI[1])
IF REQUIRED AS PER PLANS
EXTERIOR CLADDING AS PER PLAN
BUILDING PAPER (AS REQ'D)
3/8" O.S.B. SHEATHING (1/2" DENSGLASS OR EQIVALENTFOR ZLL)
2X6 STUDS AS PER ENGINEER'S DETAIL
R-20 BATT INSULATION
6 mil. CGSB POLY VAPOR BARRIER
1/2" DRYWALL

ATTACHED GARAGE/HOUSE WALL (2.85 RSI)
IF REQUIRED AS PER PLANS
1/2" DRYWALL (FIRE TAPED)
3/8" O.S.B. SHEATHING
2X6 STUDS @ 24" o/c
R-20 BATT INSULATION
6 mil. CGSB POLY VAPOR BARRIER
1/2" DRYWALL

EXTERIOR CANTILEVERED WALL (2.78 RSI[1])
WITHIN 1.2m SIDE YARD SETBACK
IF REQUIRED AS PER PLANS
EXTERIOR CLADDING AS PER PLAN
BUILDING PAPER (AS REQ'D)
5/8" DENSGLASS OR EQUIVALENT
2X6 STUDS @ 24" o/c
R-20 BATT INSULATION
6 mil. CGSB POLY VAPOR BARRIER
1/2" DRYWALL

EXTERIOR ZERO LOT LINE WALL (2.69 RSI[1])
WITHIN 1.2m SIDE YARD SETBACK
IF REQUIRED AS PER PLANS
EXTERIOR CLADDING AS PER PLAN
BUILDING PAPER (AS REQ'D)
1/2" DENSGLASS OR EQUIVALENT
2X6 STUDS @ 16" o/c
R-20 BATT INSULATION
6 mil. CGSB POLY VAPOR BARRIER
5/8" TYPE 'X' DRYWALL

EXTERIOR PARTY WALL JOGS (3.51 RSI[1])
IF REQUIRED AS PER PLANS
EXTERIOR CLADDING AS PER PLAN
BUILDING PAPER (AS REQ'D)
5/8" DENSGLASS OR EQUIVALENT
2X4 STUDS @ 16" o/c
R-12 BATT INSULATION
1" AIR SPACE
2X4 STUDS @ 16" o/c
R-12 BATT INSULATION
6 mil. CGSB POLY VAPOR BARRIER
5/8" TYPE 'X' DRYWALL

3 FLOOR ASSEMBLIES

INTERIOR FLOOR (N/A RSI)
FLOOR FINISH AS SPECIFIED
3/8" U-LAY IN LINO AREAS
23/32" T&G OSB SUBFLOOR GLUED AND SCREWED
ENGINEERED WOOD JOISTS AS PER MANUFACTURER

FLOOR OVER UNHEATED SPACE (6.67 RSI[2])
FLOOR FINISH AS SPECIFIED
3/8" U-LAY IN LINO AREAS
23/32" T&G OSB SUBFLOOR GLUED AND SCREWED
6 mil. CGSB POLY VAPOR BARRIER
ENGINEERED WOOD JOISTS AS PER MANUFACTURER
R-40 1/2 lb OPEN-CELL SPRAY FOAM INSULATION
1/2" DRYWALL

CANTILEVERED MAIN FLOOR (5.18 RSI[2])
IF REQUIRED AS PER PLANS
FLOOR FINISH AS SPECIFIED
3/8" U-LAY IN LINO AREAS
23/32" T&G OSB SUBFLOOR GLUED AND SCREWED
6 mil. CGSB POLY VAPOR BARRIER
ENGINEERED WOOD JOISTS AS PER MANUFACTURER
R-28 2lb CLOSED-CELL SPRAY FOAM INSULATION
3/8" OSB SHEATHING
NON-VENTED METAL SOFFIT

CANTILEVERED UPPER FLOOR (6.79 RSI[2])
IF REQUIRED AS PER PLANS
FLOOR FINISH AS SPECIFIED
3/8" U-LAY IN LINO AREAS
23/32" T&G OSB SUBFLOOR GLUED AND SCREWED
6 mil. CGSB POLY VAPOR BARRIER
ENGINEERED WOOD JOISTS AS PER MANUFACTURER
R-40 2lb CLOSED-CELL SPRAY FOAM INSULATION
3/8" OSB SHEATHING
NON-VENTED METAL SOFFIT

4 BASEMENT WALL ASSEMBLIES

FOUNDATION W/ FROST WALL (2.08 RSI)
**UNLESS NOTED OTHERWISE ON PLANS
PARGING ABOVE GRADE
DAMPROOFING ON EXTERIOR OF FOUNDATION WALLS (TO COMPLY WITH NBC - 2019 ALBERTA EDITION 9.13.2.3.(2)(a)(iii))
8" CONC FOUNDATION WALL C/W 2 ROWS OF 2-#10 BARS
STUDS @24" o/c
R-12 BATT INSULATION
6 mil CSGB POLY VAPOR BARRIER
1/2" DRYWALL (FINISHED AREAS)
18"X 8" CONCRETE STRIP FOOTING OR AS REQUIRED BY ENGINEER'S REPORT
TELEPOST PAD FOOTINGS AS PER PLAN
WINDOWS OVER 48 INCHES IN LENGTH TO BE BRACED AS PER ENGINEER'S DETAIL
OPEN TO BELOW AREA WALLS WILL BE REINFORCED AS PER ENGINEER'S DETAIL

5 BASEMENT FLOOR ASSEMBLY (0.19 RSI)

A) CUPOLEX CONCRETE FORMS USED AS A BASE BELOW THE BASEMENT CONCRETE SLAB. REFER TO ENGINEER'S DETAIL
OR
B) 8" FILL TO COMPLY WITH NBC-2019 ALBERTA EDITION 9.16.2.1.(1)
6mil CGSB POLY VAPOR BARRIER
3" CONCRETE SLAB - ALL SEAMS & PENETRATIONS TO BE SEALED WITH FLEXIBLE SEALANT AS PER NBC - 2019 ALBERTA EDITION - 9.25.3.3.(5)

6 INTERIOR WALL ASSEMBLIES (N/A RSI)

1/2" DRYWALL
2X4" STUDS @ 24" O.C. (OR DEEPER STUD IF REQUIRED ON PLANS)
1/2" DRYWALL

[1] RSI VALUE EXCLUDES FINISHED CLADDING
[2] RSI VALUE EXCLUDES INTERIOR FINISHED MATERIAL

** ALL WINDOWS TO BE AS PER U-VALUES BELOW OR LESS **

TYPE / OPERATION	GLAZING**	SERIES	U-VALUE (W/m²K)
PICTURE	HS2 / HS5 W/ ARGON	6700	1.14
SLIDER	HS2 / HS5 W/ ARGON	6700	1.31
SINGLE HUNG	HS2 / HS5 W/ ARGON	6700	1.31
CASEMENT	HS2 / HS5 W/ ARGON	9100	1.19
AWNING	HS2 / HS5 W/ ARGON	9100	1.19
BASEMENT SLIDER	HS2 W/ ARGON	5600	1.31
EXTERIOR DOOR w/ GLAZING	HS1 W/ ARGON	--	1.36
EXTERIOR PATIO/GARDEN DOOR	HS1 W/ ARGON	--	1.48
EXTERIOR DOOR w/o GLAZING	--	--	0.85

**HS1 GLAZING=DUAL PANE (CLEAR / LOW-E)
HS2 GLAZING=TRIPLE PANE (CLEAR/CLEAR/LOW-E)
HS5 GLAZING=TRIPLE PANE (CLEAR/CLEAR/SUNSTOP)

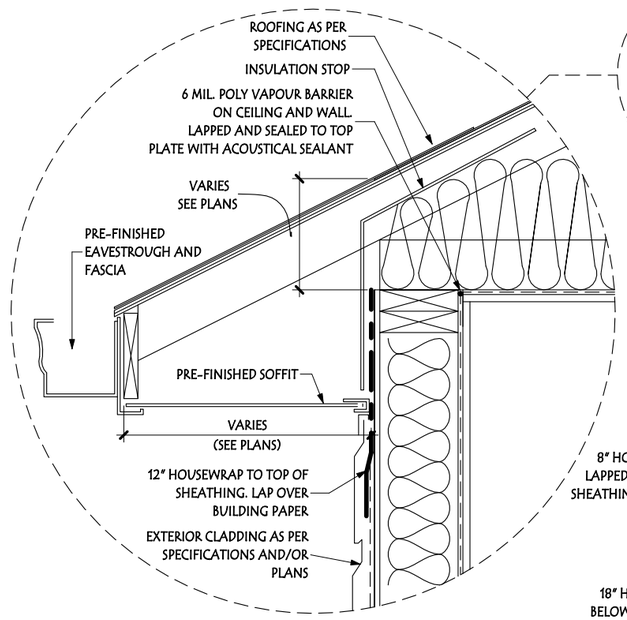

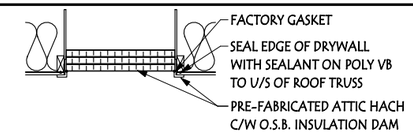

ATTIC ACCESS DETAIL
N.T.S.

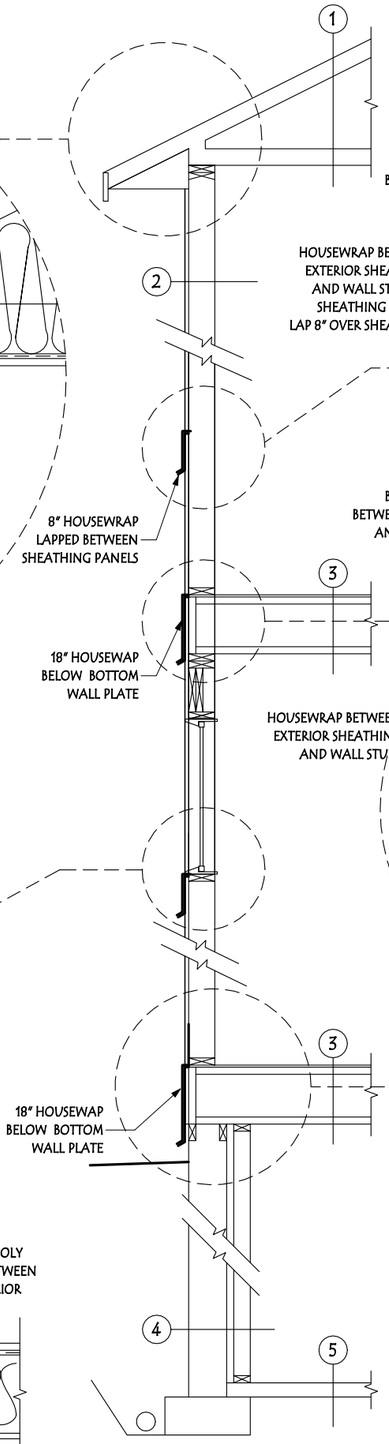

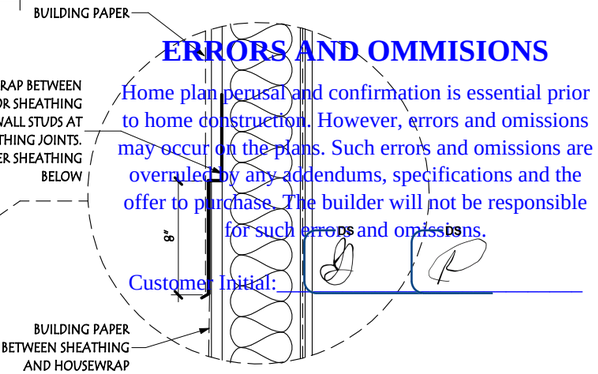

ERRORS AND OMMISIONS

Home plan perusal and confirmation is essential prior to home construction. However, errors and omissions may occur on the plans. Such errors and omissions are overruled by any addendums, specifications and the offer to purchase. The builder will not be responsible for such errors and omissions.

Customer Initial:

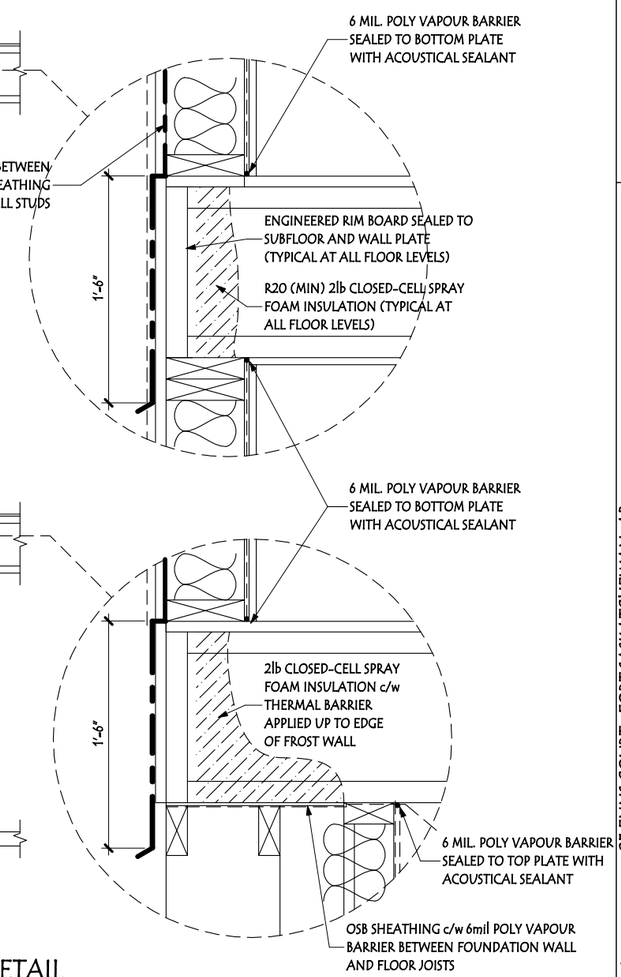

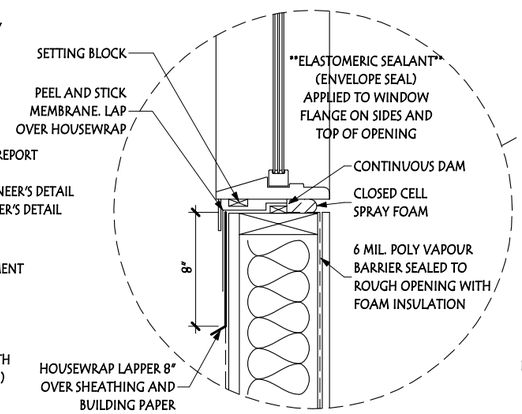

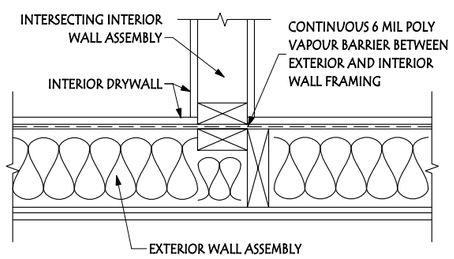

INTERIOR WALL INTERSECTION DETAIL
N.T.S.

EXTERIOR ENVELOPE DETAIL
N.T.S.

Customer: TALLMAN & RUPERT
JOB #: 31136
Address: 25 ENNS COURT, FORT SASKATCHEWAN, AB
75 / 18 / 222-2161
Drawn By: N. HUNT-LEE

	Const.	Market.
Main Fl.	922 SF	983 SF
Upper Fl.	1117 SF	1175 SF
Total	2039 SF	2158 SF

TRAILBLAZER SERIES
Page: 13 / 14
Model: COLUMBIA (P-K)
Scale: 3/16" = 1'-0"
Date: 4/12/2023 3:29:18 PM
Bsmnt. Devl: 0 SF

Pacesetter HOMES A QUALICO Company

These blueprints are the property of Pacesetter Homes Ltd. 3203 - 93 Street, Edmonton, Alberta T6N 0B2. All rights reserved, including the right of reproduction in whole or in part, in any form, without the written permission of Pacesetter Homes Ltd.

Construction Square footage is based on floor area
Marketing Square footage includes stairwells

DocuSign Envelope ID: DF254F18-B5BA-4FDC-9026-5FA086690C37

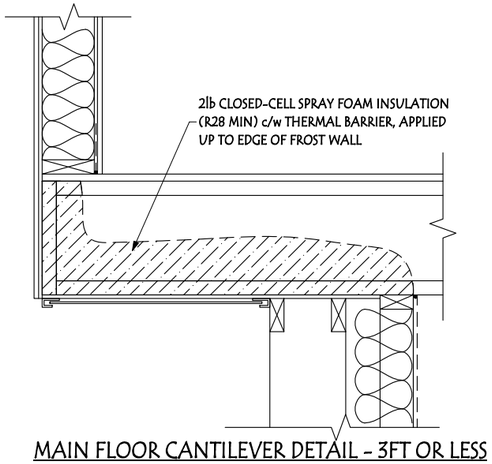

MAIN FLOOR CANTILEVER DETAIL - 3FT OR LESS
3/4"=1'-0"

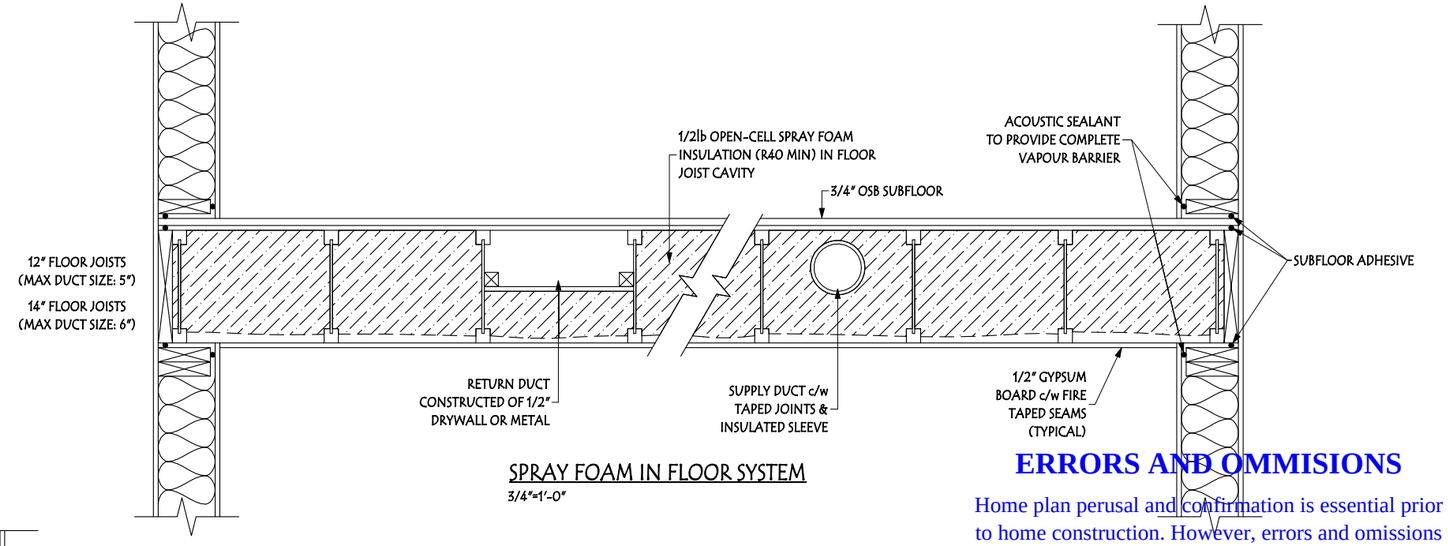

SPRAY FOAM IN FLOOR SYSTEM
3/4"=1'-0"

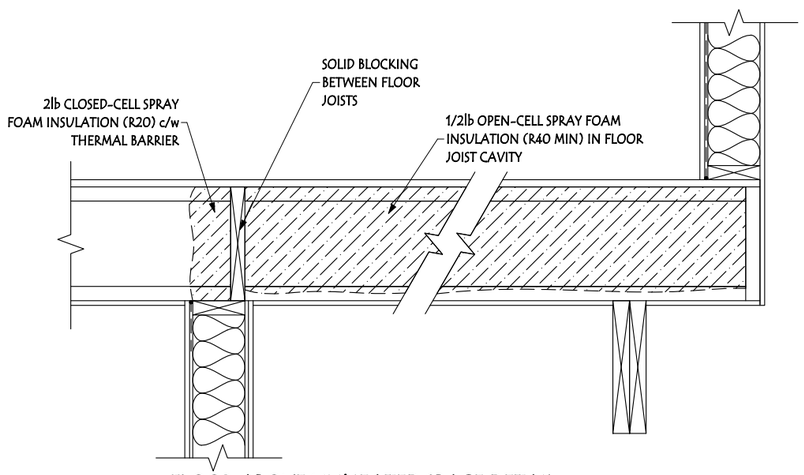

FLOOR ABOVE UNHEATED SPACE DETAIL
3/4"=1'-0"

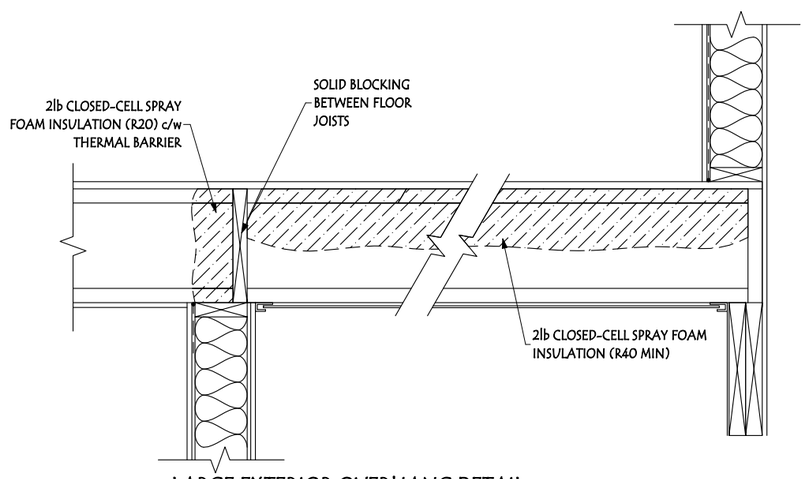

LARGE EXTERIOR OVERHANG DETAIL
3/4"=1'-0"

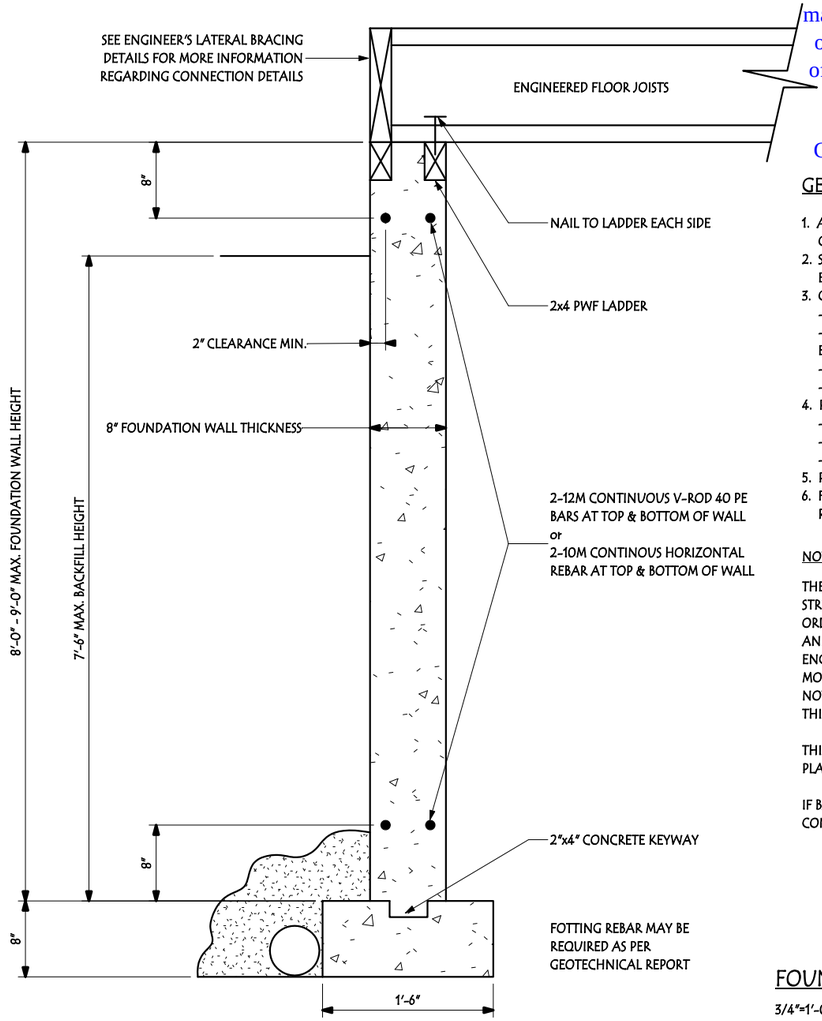

FOUNDATION WALL DETAIL
3/4"=1'-0"

ERRORS AND OMMISIONS

Home plan perusal and confirmation is essential prior to home construction. However, errors and omissions may occur on the plans. Such errors and omissions are overruled by any addendums, specifications and the offer to purchase. The builder will not be responsible for such errors and omissions.DS

Customer Initial:

GENERAL NOTES:

1. ALL OF THE CONSTRUCTION SHOULD BE IN ACCORDANCE WITH THE CURRENT NATIONAL BUILDING CODE (NBC - 2019 ALBERTA EDITION).
2. SEE MANUFACTURER'S INSTRUCTIONS FOR INSTALLATION / SUPPORT OF ENGINEERED FLOOR JOISTS.
3. CONCRETE:
   - 32 MPA TYPE 50 (HS) OR SPECIFIED IN SULPHATE TEST REPORT
   - ALL CONCRETE EXPOSED TO FREEZE / THAW CYCLE HAS A MINIMUM AIR ENTRAINMENT OF 5-7%
   - INTERNAL VIBRATION WITH A 31.8mm (1.25") MECHANICAL VIBRATOR
   - MAXIMUM CONCRETE FORM PRESSURE (HURD, THUNMAN) 29KPa
4. REINFORCING DETAIL
   - IT IS DESIGNED TO CSA A23.3-94
   - IT REINFORCES TO CSA CAN-A23.1-M90 AND CSA G30.12.M77
   - ITS STRENGTH IS 400 Mpa
5. PROVIDE WEEPING TILES AROUND FOOTINGS c/w DRAIN GRAVEL
6. FOOTING SIZES AS PER CURRENT NBC AND/OR GEOTECHNICAL ENGINEER'S RECOMENDATIONS

NOTES:

THE CONTRACTOR TO VERIFY ALL DIMENSIONS AND DATA NOTED ON THE STRUCTURAL DRAWING WITH CONDITIONS ON SITE. CONTRACTOR IS TO CO-ORDINATE ALL OF THE DIMENSIONS WITH THE ARCHITECTURAL DRAWINGS AND IS HELD RESPONSIBLE FOR REPORTING ANY DISCREPANCIES TO THE ENGINEER BEFORE PROCEEDING WITH THE WORK. VARIATIONS AND MODIFICATIONS TO WORK SHOWN ON THE STRUCTURAL DRAWINGS SHALL NOT BE CARRIED OUT WITHOUT WRITTEN PERMISSION FROM THE ENGINEER. THIS DRAWING IS NOT TO BE SCALED

THIS DETAIL IS VALID WHEN BACKFILL SOILS ARE SAND / GRAVEL OR LOW PLASTIC

IF BACKFILL SOILS ARE MEDIUM TO HIGH PLASTIC THEN ENGINEER SHOULD BE CONTACTED

Customer: TALLMAN & RUPERT
JOB #: 31136
Address: 25 ENNS COURT, FORT SASKATCHEWAN, AB
75 / 18 / 222-2161
Drawn By: N. HUNT-LEE

	Const.	Market.
Main Fl.	922 SF	983 SF
Upper Fl.	1117 SF	1175 SF
Total	2039 SF	2158 SF

TRAILBLAZER SERIES
Page: 14 / 14
Pacesetter HOMES A QUALICO Company
Model: COLUMBIA (P-K)
Scale: 3/16" = 1'-0"
Date: 4/12/2023 3:29:19 PM
Bsmnt. Devl:

These blueprints are the property of Pacesetter Homes Ltd. 3203 - 93 Street, Edmonton, Alberta T6N 0B2. All rights reserved, including the right of reproduction in whole or in part, in any form, without the written permission of Pacesetter Homes Ltd.

Construction Square footage is based on floor area
Marketing Square footage includes stairwells